NHK MEC

KE-5+

ELECTRONIC CONTROL SYSTEM

INSTRUCTION MANUAL

TABLE OF CONTENTS

TABLE OF CONTENTS (continued)

INTRODUCTION

This manual has been prepared to ensure your correct installation and operation of the KE-5+ control system. Be sure to read this manual thoroughly to understand how the system works. Always keep the manual within your reach during operation.
This product controls the shift (gear) and throttle (governor). It is recommended therefore to read the manual of engine and gear.
The specifications may be subject to change without notice in view of improvement, resulting in more or less difference between the content of the manual and the product. In case of ambiguity or questions concerning the product or the manual, consult with your dealer.

In case of KE control system transfer of ownership, please make sure to include this instruction manual.

SAFETY PRECAUTIONS

This manual contains precautions under the following headers, pay particular attention on these precautions.

⚠ WARNING

Failure to comply with a Warning may result in an accident of death or serious injury.

⚠ CAUTION

Failure to comply with a Caution may result in a minor or moderate injury or damage to the product or properties.

INSTALLATION / REPAIR

The installation of this product must be performed following all applicable installation and safety codes.

Only authorized personnel should perform disassembly and repair of this product; otherwise the warranty will be voided.

PRODUCT SPECIFICATIONS

1. Electrical Performance

Supply voltage range: DC9V ~ DC31V

2. Shift Outputs

Shift output is coupled to power supply voltage output. Connections are for Forward Switch, Reverse Switch & Neutral Switch. Capacity: 9A max.

3. Throttle Outputs

(1) <u>Current Output</u>

Current output: 4mA to 20mA
Idle Validation Switch (Normally Closed, Normally Open)
Capacity: 24V, 2A max.

(2) <u>Voltage Output</u>

Voltage output: 0.2V to 4.5V
Idle Validation Switch (Normally Closed, Normally Open)
Capacity: 24V, 2A max.

(3) <u>PWM Output</u>

PWM output: 6% to 94% Duty Cycle, 500Hz
Idle Validation Switch (Normally Closed, Normally Open)
Capacity: 24V, 2A max.

(4) <u>CAN Output</u>

SAE J1939 protocol output
Idle Validation Switch (Normally Closed, Normally Open)
Capacity: 24V, 2A max.

4. Temperature Range

(1) Operating temperature: −20° C ~ +77° C
(2) Storage temperature : −40° C ~ +100° C

PRODUCT FUNCTIONS

Main

- Shift: Forward/Reverse operation control
- Throttle: Acceleration/deceleration control
- Neutral throttle: Only throttle is activated in order to warm up the engine.
- Control Station Select: Up to 4 control heads + 1 handheld.
- Start in Gear Protection: Enables engine start up only when the shift is in neutral position.
- Synch: Allows multi-engine speed synchronization; single lever & dual lever modes available.
- SIGP: Enables engine start-up only when vessel is in neutral position; a safety feature.
- Settings: Allow various settings for various configurations.
- Alarm Codes: Detected system faults are indicated via flashing LED's on the control head.

Options

- Dim display: Decreases brightness of the lamp on the control head in the night time.
- Buzzer: Combines an audio alarm to LED codes
- Idle Control: Provides idle setting of engines via 2 button switches / 1 LED
- Multi engine control: Triple & Quad engine configurations are operable via these optional control switches
- Handheld Station: Provides a handheld / mobile version of the control head via a long harness.
- Settings Tool: Software version of actuator settings (substitute for DIP switch settings). Can be particularly useful for multi-vessel settings management. Requires a laptop connection

PRODUCT COMPLIANCE

MEMBER ABYC® Setting Standards for Safer Boating

ISO 9001 QUALITY

CE

TYPE APPROVAL GL GL VI-7-2

1. USA

- ABYC: This control system meets applicable requirements of various ABYC standards.

2. INTERNATIONAL

- TYPE APROVAL: This control system has been tested in accordance with the relevant requirements of the GL (Germanischer Lloyd) Type Approval System (certificate 59 985-13 HH).
- ISO: This control system meets applicable requirements of various ISO test standards. Additionally, the Quality Management System for this product meets ISO 9001 quality standards.
- CE : This control system meets applicable requirements of the Recreational Craft Directive & EMC Directives

SINGLE ENGINE CONFIGURATON

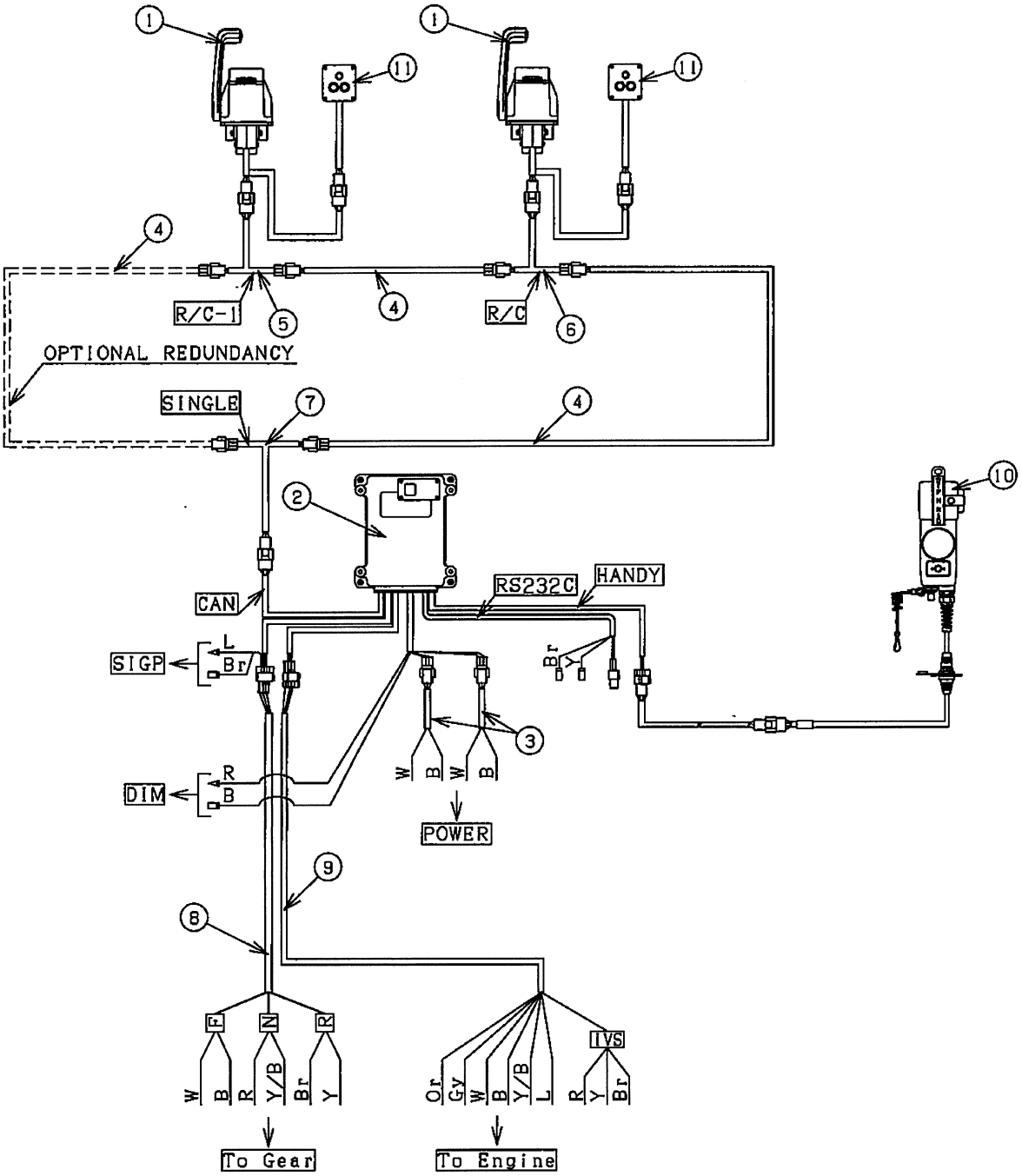

Note: Figure above is an example of a single engine / 2 control stations system with optional idle control switches and optional handheld control.

COMPONENTS LIST

KE-5+ Component Parts List (Single)			Required Quantity Single Engine No. of stations			
Description		Part number	1	2	3	4
Control Head, Single		NM1002-00	1	2	3	4
①*SST = stainless steel, (i/b style)*		NM1003-00				
② Control unit 12V/24V		NM2406-00	1			
③ Harness Power Supply	5m	NM0414-28	2			
	10m	NM0414-33				
④ Bus Harness 1m = 39 inches	2m	NM0649-02	1	2	3	4
	4m	NM0649-04				
	6m	NM0649-06				
	8m	NM0649-08				
⚠ **CAUTION** Bus harness should not exceed 80m in total length; otherwise system performance could degrade	10m	NM0649-10				
	12m	NM0649-12				
	14m	NM0649-14				
	16m	NM0649-16				
	18m	NM0649-18				
	20m	NM0649-20				
	24m	NM0649-24				
	30m	NM0649-30				
	40m	NM0649-40				
	50m	NM0649-50				
⑤ T-harness (R/C-1)		NM0647-09	1			
⑥ T-harness (R/C)		NM0647-10	-	1	2	3
⑦ T-harness (SINGLE)		NM0647-11	1			
⑧ Harness, Shift (5m or 10m)	5m	NM0640-05	1			
	10m	NM0640-10				
⑨ Harness, Throttle (5m or 10m). See page 2 for details.	5m	NM0666-05	1			
	10m	NM0666-10				
⑩ Handheld control (optional)	Refer to handheld control manual					
⑪ Idle Switch (optional)		NJ0765-00	1	2	3	4
Circuit Breaker (optional)	10A	NJ0595-00	2			
Buzzer (optional)	12V	NJ0596-00	1	2	3	4
	24V	NJ0515-00				

DUAL ENGINE CONFIGURATON

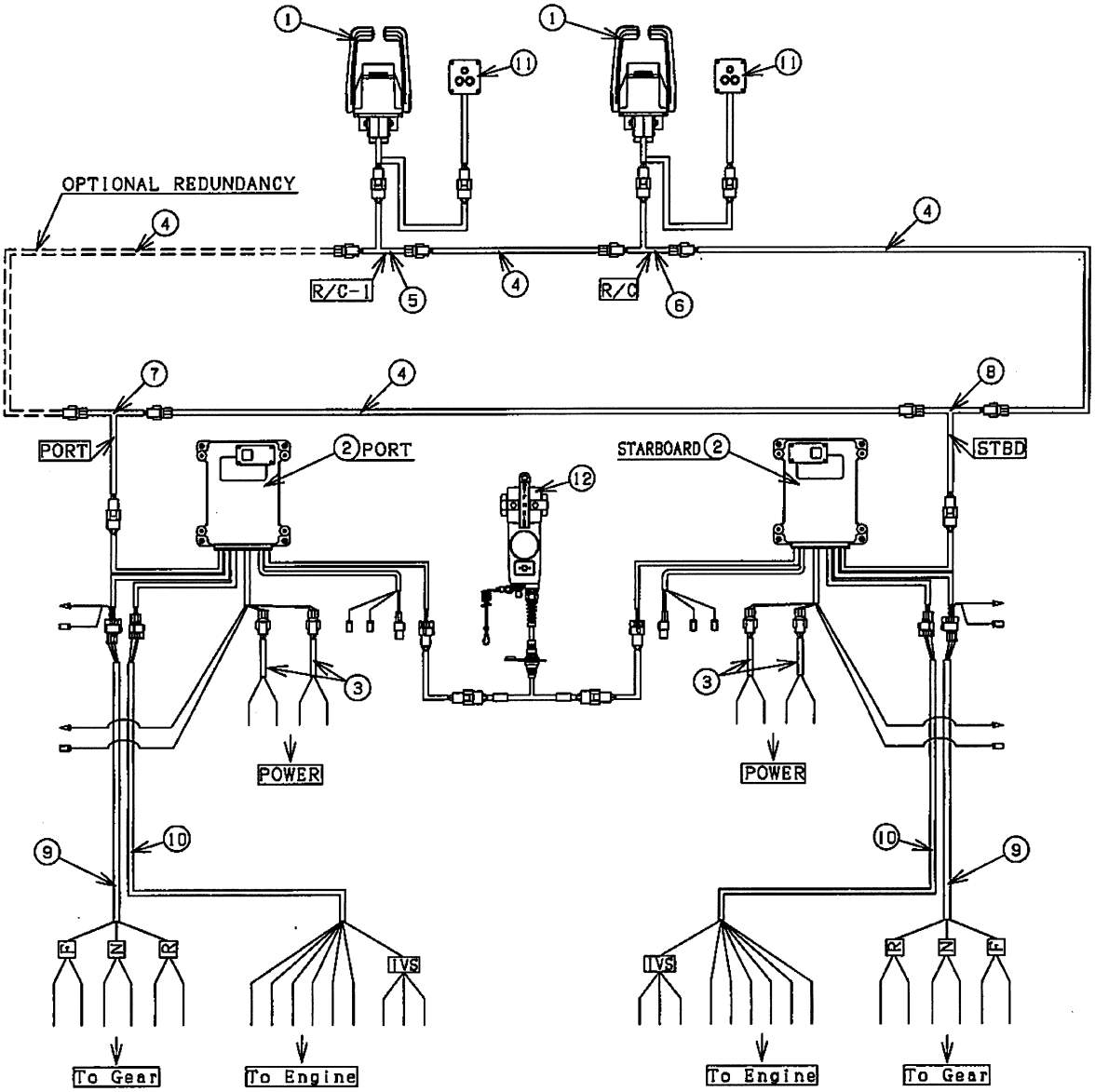

Notes:

1. The figure above is an example of a two engines / two control stations system with optional idle control switches and optional handheld control.
2. POWER: See 'Connecting Power' page for battery connection details.

COMPONENTS LIST

KE-5+ Component Parts List (Dual)			Required Quantity Dual Engine No. of stations			
Description		Part number	1	2	3	4
Control Head, Twin		NM1052-00	1	2	3	4
①*SST = stainless steel, (i/b style)*		NM1053-00				
② Control unit 12V/24V		NM2406-00	2			
③ Harness Power Supply	5m	NM0414-28	4			
	10m	NM0414-33				
④ Bus Harness 1m = 39 inches	2m	NM0649-02	2	3	4	5
	4m	NM0649-04				
	6m	NM0649-06				
	8m	NM0649-08				
⚠ **CAUTION** Bus harness should not exceed 80m in total length; otherwise system performance could degrade	10m	NM0649-10				
	12m	NM0649-12				
	14m	NM0649-14				
	16m	NM0649-16				
	18m	NM0649-18				
	20m	NM0649-20				
	24m	NM0649-24				
	30m	NM0649-30				
	40m	NM0649-40				
	50m	NM0649-50				
⑤ T-harness (R/C-1)		NM0647-09	1			
⑥ T-harness (R/C)		NM0647-10	-	1	2	3
⑦ T-harness (PORT)		NM0647-12	1			
⑧ T-harness (STBD)		NM0647-13	1			
⑨ Harness, Shift (5m or 10m)	5m	NM0640-05	2			
	10m	NM0640-10				
⑩ Harness, Throttle (5m or 10m). See page 2 for details.	5m	NM0666-05	2			
	10m	NM0666-10				
⑪ Idle Switch (optional)		NJ0765-00	1	2	3	4
⑫ Handheld control (optional)	Refer to handheld control manual					
Circuit Breaker (optional)	10A	NJ0595-00	4			
Buzzer (optional)	12V	NJ0596-00	1	2	3	4
	24V	NJ0515-00				

TRIPLE ENGINE CONFIGURATON

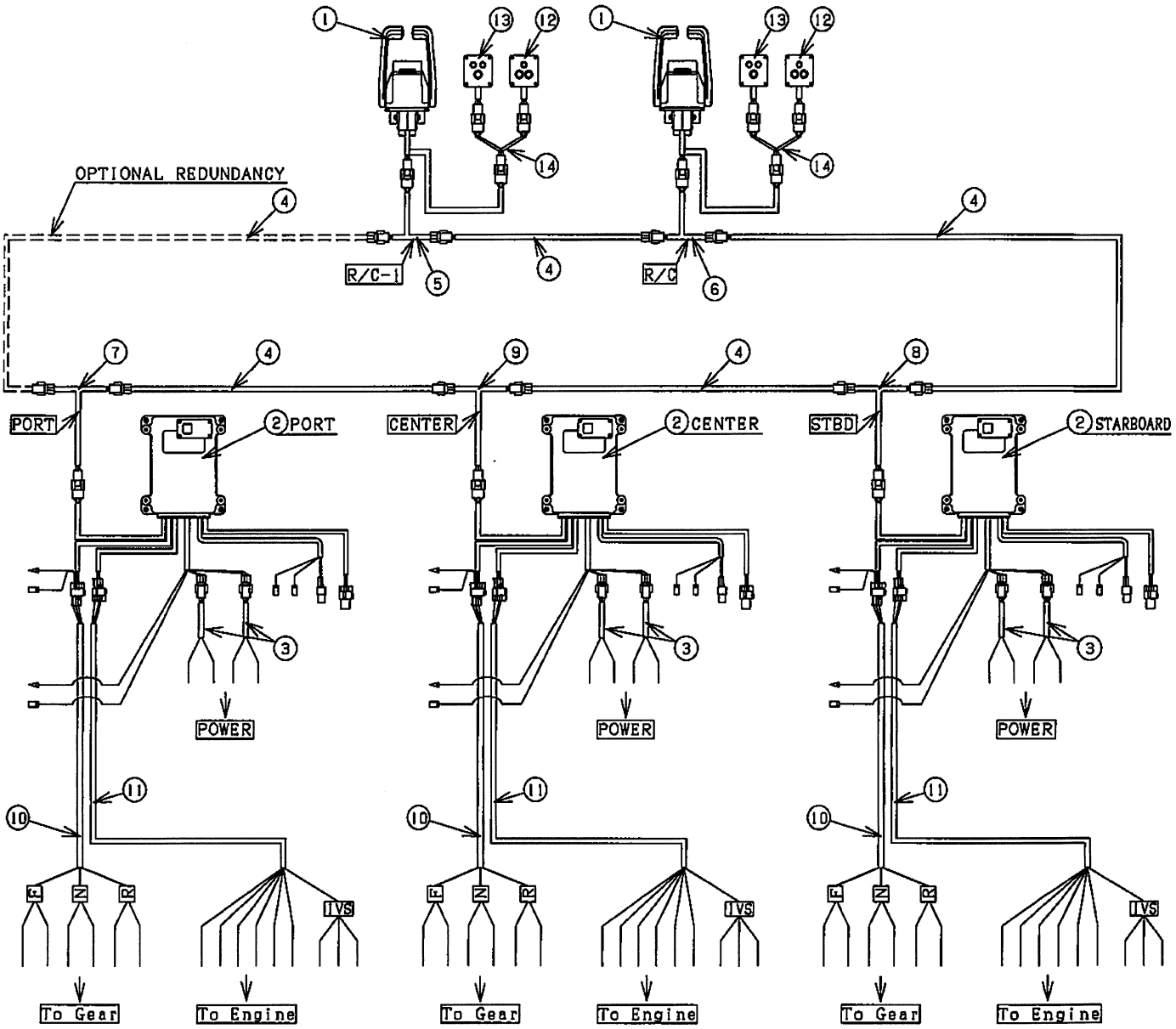

Notes:

1. The figure above is an example of a three engines / two control stations system with optional idle control switch.
2. POWER: See 'Connecting Power' page for battery connection details.

COMPONENTS LIST

KE-5+ Component Parts List (Triple)			Required Quantity Triple Engine No. of stations			
Description		Part number	1	2	3	4
Control Head, Twin		NM1052-00	1	2	3	4
①*SST = stainless steel, (i/b style)*		NM1053-00				
② Control unit 12V/24V		NM2406-00	3			
③ Harness Power Supply	5m	NM0414-28	6			
	10m	NM0414-33				
④ Bus Harness 1m = 39 inches ⚠ **CAUTION** Bus harness should not exceed 80m in total length; otherwise system performance could degrade	2m	NM0649-02	3	4	5	6
	4m	NM0649-04				
	6m	NM0649-06				
	8m	NM0649-08				
	10m	NM0649-10				
	12m	NM0649-12				
	14m	NM0649-14				
	16m	NM0649-16				
	18m	NM0649-18				
	20m	NM0649-20				
	24m	NM0649-24				
	30m	NM0649-30				
	40m	NM0649-40				
	50m	NM0649-50				
⑤ T-harness (R/C-1)		NM0647-09	1			
⑥ T-harness (R/C)		NM0647-10	-	1	2	3
⑦ T-harness (PORT)		NM0647-12	1			
⑧ T-harness (STBD)		NM0647-13	1			
⑨ T-harness (CENTER)		NM0647-14	1			
⑩ Harness, Shift (5m or 10m)	5m	NM0640-05	3			
	10m	NM0640-10				
⑪ Harness, Throttle (5m or 10m). See page 2 for details.	5m	NM0666-05	3			
	10m	NM0666-10				
⑫ Idle Switch (optional)		NJ0765-00	1	2	3	4
⑬ Triple Switch		NJ0767-00	1	2	3	4
⑭ SW extension harness (optional)		NM0647-08	1	2	3	4
Circuit Breaker (optional)	10A	NJ0595-00	6			
Buzzer (optional)	12V	NJ0596-00	1	2	3	4
	24V	NJ0515-00				

QUAD ENGINE CONFIGURATON

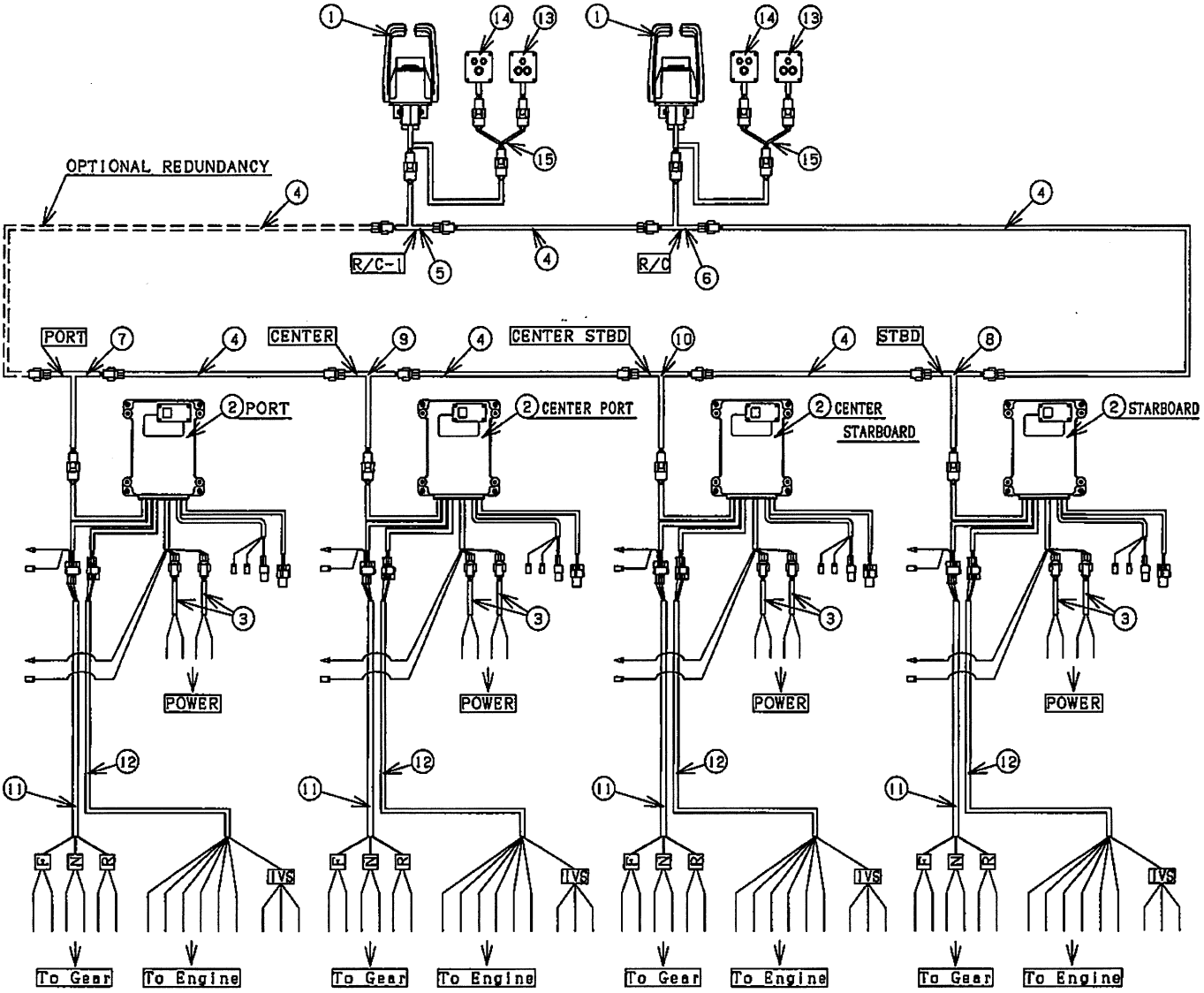

Notes:

1 The figure above is an example of a four engines / two control stations system with optional idle control switch.

2 POWER: See 'Connecting Power' page for battery connection details.

COMPONENTS LIST

KE-5+ Component Parts List (Quad)			Required Quantity Quad Engine No. of stations			
Description		Part number	1	2	3	4
Control Head, Twin		NM1052-00	1	2	3	4
①*SST = stainless steel, (i/b style)*		NM1053-00				
② Control unit 12V/24V		NM2406-00	4			
③ Harness Power Supply	5m	NM0414-28	8			
	10m	NM0414-33				
④ Bus Harness 1m = 39 inches **⚠ CAUTION** Bus harness should not exceed 80m in total length; otherwise system performance could degrade	2m	NM0649-02	4	5	6	7
	4m	NM0649-04				
	6m	NM0649-06				
	8m	NM0649-08				
	10m	NM0649-10				
	12m	NM0649-12				
	14m	NM0649-14				
	16m	NM0649-16				
	18m	NM0649-18				
	20m	NM0649-20				
	24m	NM0649-24				
	30m	NM0649-30				
	40m	NM0649-40				
	50m	NM0649-50				
⑤ T-harness (R/C-1)		NM0647-09	1			
⑥ T-harness (R/C)		NM0647-10	-	1	2	3
⑦ T-harness (PORT)		NM0647-12	1			
⑧ T-harness (STBD)		NM0647-13	1			
⑨ T-harness (CENTER)		NM0647-14	1			
⑩ T-harness (CENTER STBD)		NM0647-15	1			
⑪ Harness, Shift (5m or 10m)	5m	NM0640-05	4			
	10m	NM0640-10				
⑫ Harness, Throttle (5m or 10m). See page 2 for details.	5m	NM0666-05	4			
	10m	NM0666-10				
⑬ Idle Switch (optional)		NJ0765-00	1	2	3	4
⑭ Quad Switch		NJ0768-00	1	2	3	4
⑮ SW extension harness (optional)		NM0647-08	1	2	3	4
Circuit Breaker (optional)	10A	NJ0595-00	8			
Buzzer (optional)	12V	NJ0596-00	1	2	3	4
	24V	NJ0515-00				

CONTROL UNIT

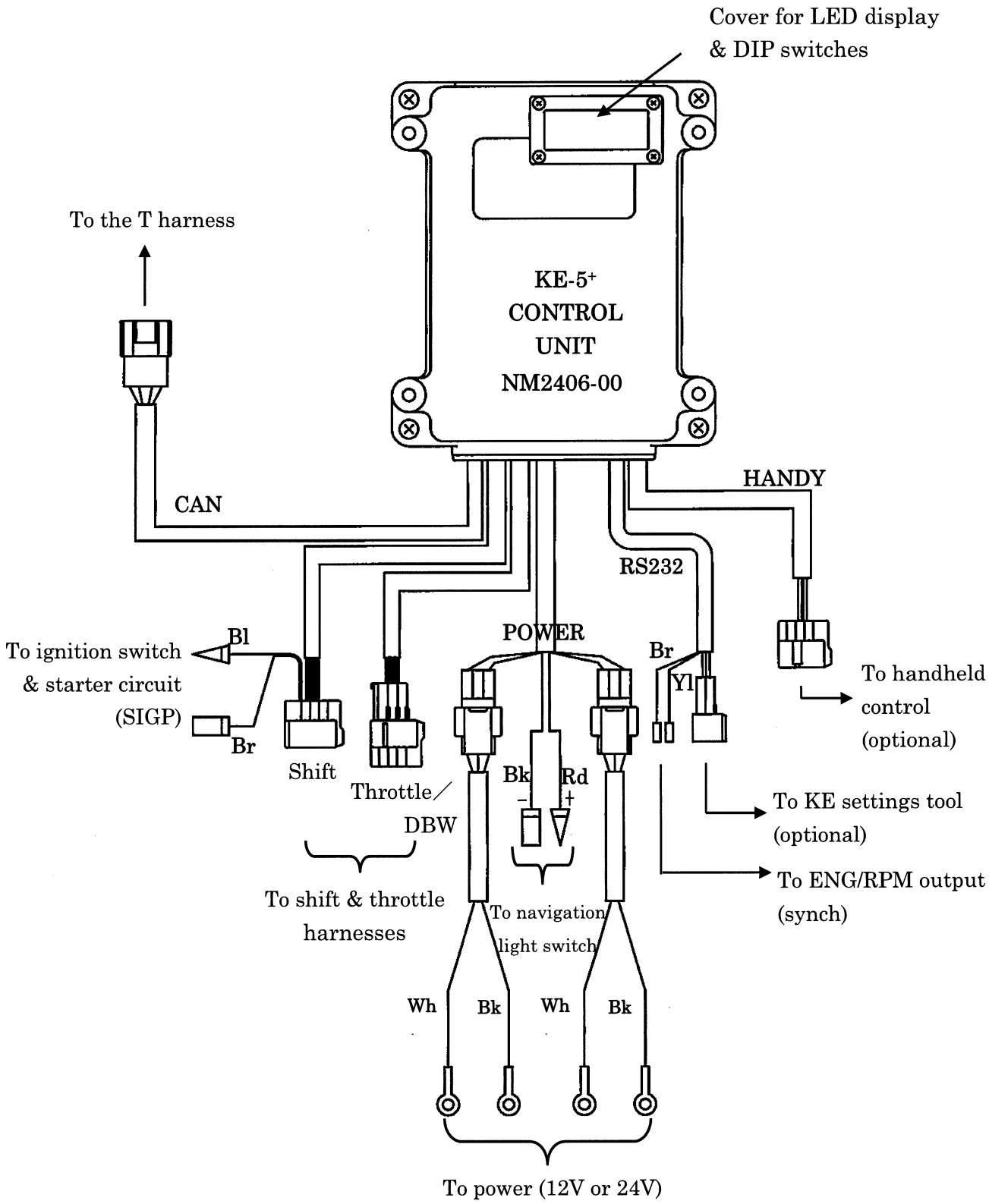

Note: The control unit is a common-mode type that can be used with either 12V or 24V power

CONTROL HEAD

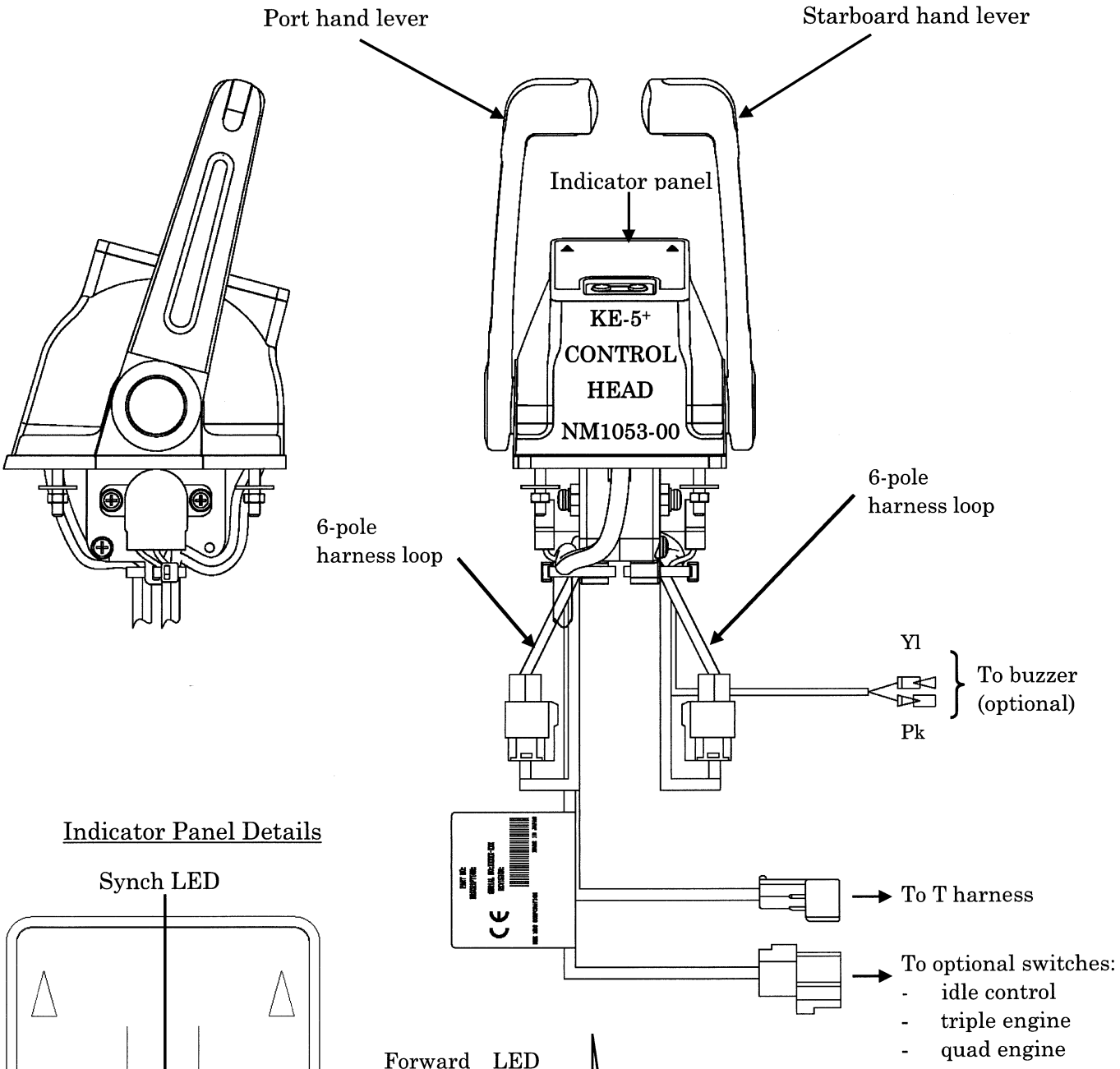

Indicator Panel Details

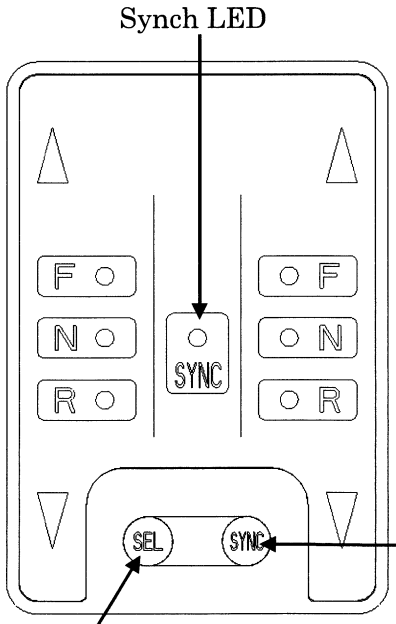

Forward LED (Orange)
Neutral LED (Green)
Reverse LED (Orange)

The neutral (N) LED flashes during neutral throttle operation.
All LED's flash when an alarm is activated.

Synch switch: Use to activate engine synchronization.

Select switch: Press to select station, set/cancel neutral throttle operation, & stop the buzzer.

Note: When the power supply is turned ON, the control head connected to R/C-1 T-harness is the first one to become operative. Be sure to connect a control head to R/C-1 T-harness.

KE SYSTEM OPERATION

Initial Operation after Power ON

1. With power ON, and the hand lever(s) in the "Neutral" position, the system will be in the neutral idle condition.
2. (A) Set the handle lever(s) to the Neutral position.
   (B) The green neutral LED(s) lights ON indicating the control is operational.

Note: If the hand lever(s) are moved to a forward or reverse gear position while power is not applied to the control system, and then power is applied, control system will not become operational until the hand lever(s) are moved into the neutral position. The green neutral LED(s) then lights ON indicating the control is operational.

3. When other control stations are connected to R/C T-harness perform the following actions.
   (A) Set the hand lever to the Neutral position.
   (B) Press + release SELect switch.
   (C) The green neutral LED(s) then lights ON indicating the control is operational.

Control Lever Operation

⚠ WARNING

DO NOT ATTEMPT sudden forward to reverse the hand lever(s) operation. Sudden acceleration/ deceleration may cause damage to the boat or cause operator or passengers to be ejected from the boat.

(1) Moving the hand lever from the neutral position to the forward or reverse detent causes the gear to shift to forward or reverse. The orange forward or reverse LED(s) light ON to indicate forward or reverse gear position obtained.

(2) Moving the hand lever past the Forward or Reverse detent activates the engine throttle operation and the boat will accelerate.

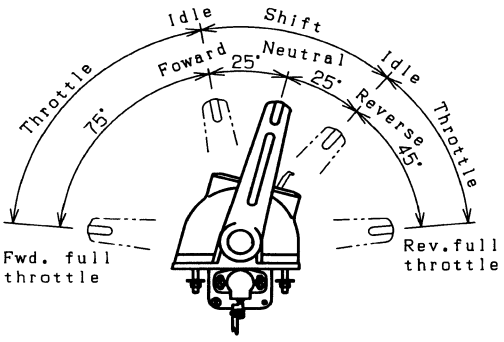

Lever Stroke and Outputs (Also see Adjusting Control Unit for details")

Lever stroke	Shift output			Throttle output		
	Forward SW	Reverse SW	Neutral SW	Output	Idle Validation Switch	
Forward throttle range	Voltage	0V	0V	Forward Throttle Output	Normally Closed	Normally Open
					Open	Closed
Forward idle	Voltage	0V	0V	Idle Throttle Output	Closed	Open
Neutral	0V	0V	Voltage/0V			
Reverse idle	0V	Voltage	0V			
Reverse throttle range	0V	Voltage	0V	Reverse Throttle Output	Open	Closed

Note: The Neutral switch can be utilized and set via SW3-4.

Neutral Throttle Operation

1. Set the hand lever to the neutral (N) position.
2. Move the hand lever to the forward gear position *while* pressing the station select switch.
3. The green neutral LED flashes and the neutral throttle operation is activated.
4. To deactivate, set the hand lever to the neutral position, press and release the select switch. After the release of the select switch green, neutral LED will stop flashing. This indicates deactivation of the neutral throttle operation.

Station Transfer for 2, 3 and 4 Station Operation from Neutral Position

1. Set the hand lever(s) of the selected control to the neutral position, press and release the select switch. A continuous green neutral LED(s) indicates that the control station is active.

Station Transfer for 2, 3 and 4 Station Operation from Forward Throttle Position

1. Set the hand lever(s) of the selected control to the neutral position, press and release the select switch. A continuous green neutral LED(s) indicates that the control station is ready for activation.
2. The operator has approximately 4 seconds to move hand levers and match the throttle position of the last active control station. A continuous orange forward LED(s) indicates control station is active and the system is in gear condition.

Note: Keeping the hand lever of the selected control station in the neutral position will result in control system automatically returning the control system to a neutral idle condition.

Synchronization Function

1. Set both hand levers to neutral (N) position.
2. Press SYNC button to activate. A continuous green SYNC LED indicates sync mode. Depending on control unit settings, synchronization will be possible in single or dual lever 2 modes.
3. DUAL LEVER MODE: Synchronization will be automatic whenever the levers are within 10° of each other and in forward mode (refer to image at top of page).
4. SINGLE LEVER MODE: Synchronization is automatic with the PORT side lever in forward mode (refer to image at top of page).
5. To deactivate: Set levers to neutral position and press SYNC button to turn OFF green SYNC LED.

INSTALLING THE CONTROL HEAD

⚠ WARNING

Install the control head in a place accessible for shift & throttle operation at all times.

Instructions:

(1) Select a flat location convenient for operation and installation.

(2) Drill the mount holes by using an attached template.

(3) Install with included washers and nuts.

Tightening Torque: 2.9~4.4N·m {2.1~3.2 lbf-ft}

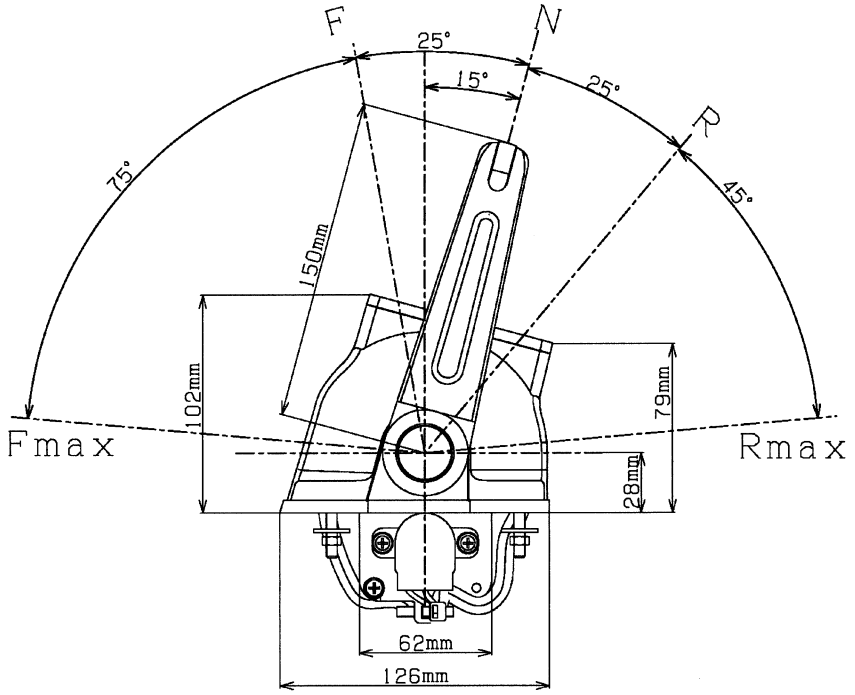

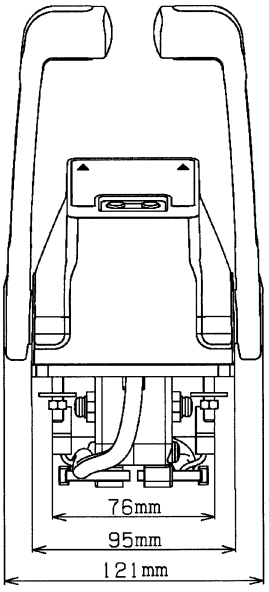

⚠ CAUTION

Mount the control head within 60 degrees from horizontal.

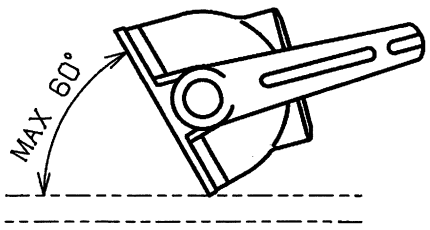

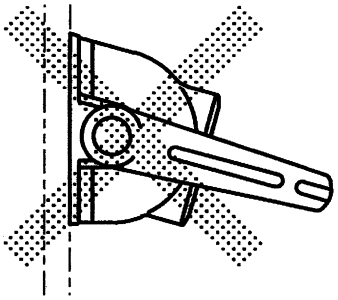

INSTALLING THE CONTROL UNIT

⚠ CAUTION

1. **Ingress of water into the unit may cause failure**
2. **Install so that harnesses exit through the bottom and the small cover faces up for easy access to DIP switches.**
3. **Install in a location where sea wind and water effects are minimized.**
4. **Avoid a location where the ambient temperature exceeds 77 ℃**

Instructions:

1. Drill mounting hole locations guide by the attached template at the back of the manual.
2. Install with included pan head machine screws or tapping screws (see data below)
3. Tighten to 4.9 ~ 7.8 N・m (3.6 ~ 5.7 lbf・ft) of torque.

Notes:

1. Machine screw mounting plate thickness: 3 ~ 20 mm (1/8 ~ 3/4 in.), mounting hole diameter: φ7mm (φ1/4 in.).
2. Tapping screw mounting plate thickness: 15 mm min. (5/8 in. min.), pilot hole diameter: φ3mm (φ1/8 in.).

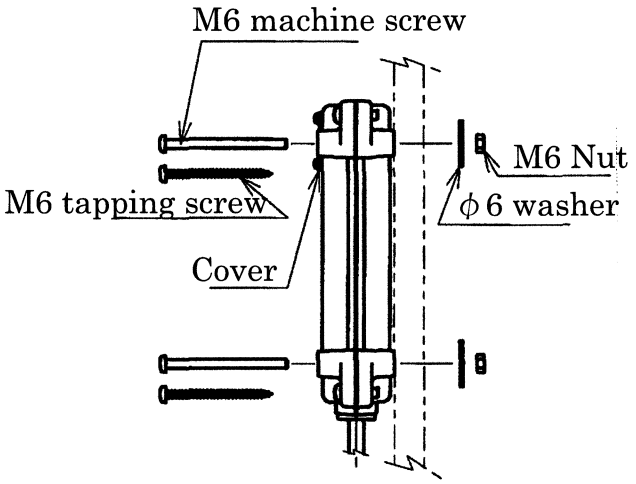

CONNECTING THE CONTROL HEAD & CONTROL UNIT

⚠ CAUTION

1. **All connectors must be mated firmly; the system may fail to operate otherwise.**
2. **Be sure to connect a control head to R/C-1. When power is applied, the control head connected to R/C-1 is the first one to be become operative.**

Instructions:

1. Connect the 8-pin harness connector of the first control head to the R/C-1 T-harness NM0647-09.
2. Connect the 8-pin harness connector of the remaining control heads to the R/C T-harness(es) NM067-10.
3. Connect the 8-pin harness (CAN) connector of the control units to the appropriate T-harnesses: SINGLE, PORT, STBD, CENTER, CENTER-STBD (NM0647-XX)
4. Finally connect a main bus harness (NM0649-XX) in between each of the T-harness connectors for a continuous data bus between from the first control head to the last control unit.
5. Optional: Add a spare bus harness (NM0649-XX) in between the last 2 ends to close the loop and create a redundant path.

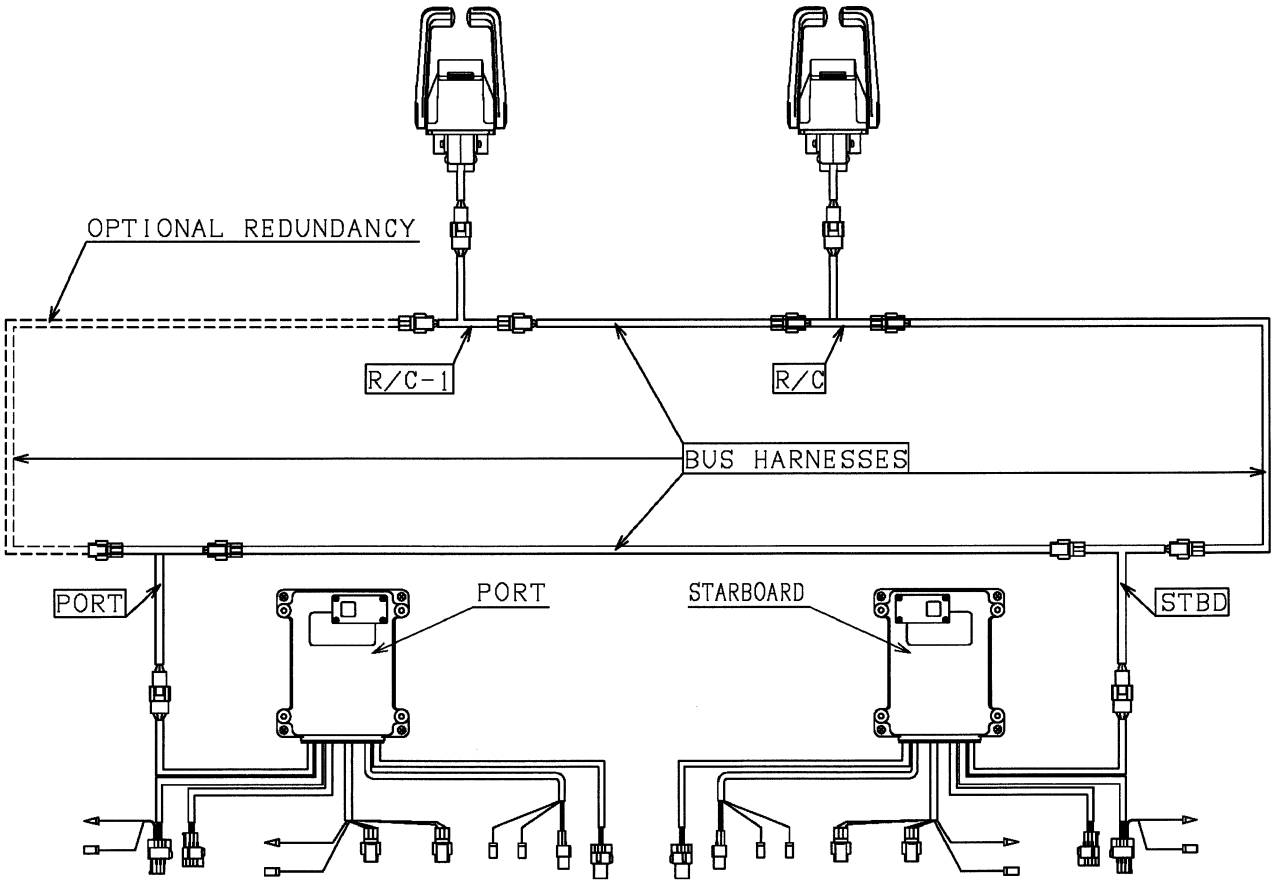

Note: The figure above is an example of a two engines / two control stations system.

CONNECTING THE ENGINE & CONTROL UNIT

⚠ CAUTION

1. Be sure to use the correct throttle harness: Current, Voltage, PWM or CAN to match your engine input requirements.
2. Connect IVS (red, yellow, brown) only if required for your engine setup.
3. Consult engine maker if necessary.

Instructions:
1. Connect one end of shift harness and throttle harness to the shift (SFT) & throttle (THR) connectors on the control units.
2. Connect the other end of the shift and throttle harnesses to the engine and gearbox connectors respectively. Refer to engine and gearbox maker instruction manuals for additional connection requirements.

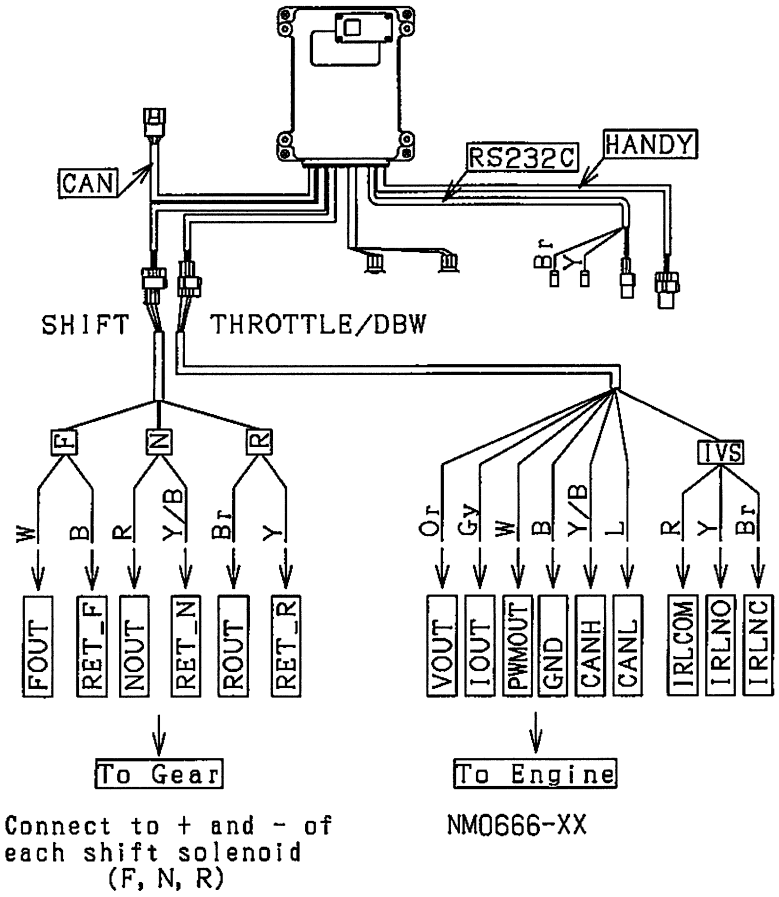

HARNESS CODE	OUTPUT DETAILS
F OUT	Forward shift
N OUT	Neutral shift
R OUT	Reverse shift
RET	Return (GND)
V OUT	Voltage throttle
I OUT	Current throttle
PWM OUT	PWM throttle
CAN	SAE J1939 throttle
IRL COM	Common point, Idle Validation (GND)
IRL NO	Normally Open Switch, Idle Validation
IRL NC	Normally Closed Switch, Idle Validation

Notes:
1. XX: 05 = 5 meters, 10 = 10 meters
2. NO = Normally Open switch, NC = Normally Closed switch

CONNECTING SIGP (START-IN-GEAR PROTECTION)

Instructions:

1. Connect between starter & ignition circuits of the boat.
2. Keep extension wires as short and as thick as possible.

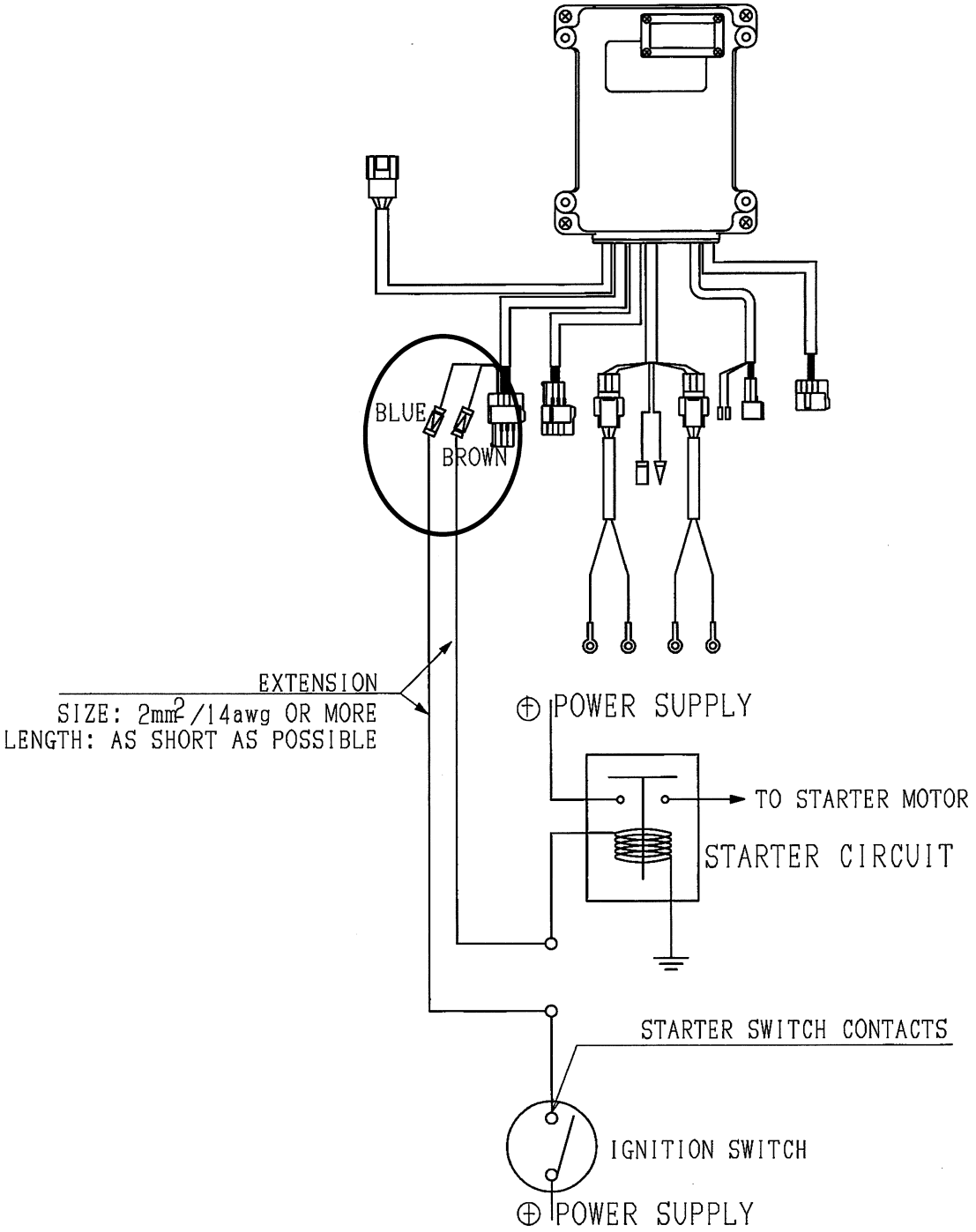

CONNECTING POWER

⚠ CAUTION

1. **As a safety feature, a duplex power line system is provided. Be sure to connect both lines. Alarm code LED's will flash if only one power line is connected.**
2. **Once power harness is connected to power (battery), before disconnecting power harnesses from control unit, first disconnect power via circuit breaker or battery switch.**

Instructions:

1. Connect the system power harnesses to the control unit before connecting each power harness to battery (power supply).
2. Connect each black wire of the power harness directly to (**−minus**) of battery (power).
3. Connect each white wire of the power harness, via the optional 10 amp circuit breaker, via the boat
4. circuit breaker or directly to (**+ plus**) of battery (power).

Note: If two batteries are provided, it is recommended to separate the power lines and connect one power line (plus breaker) to each battery.

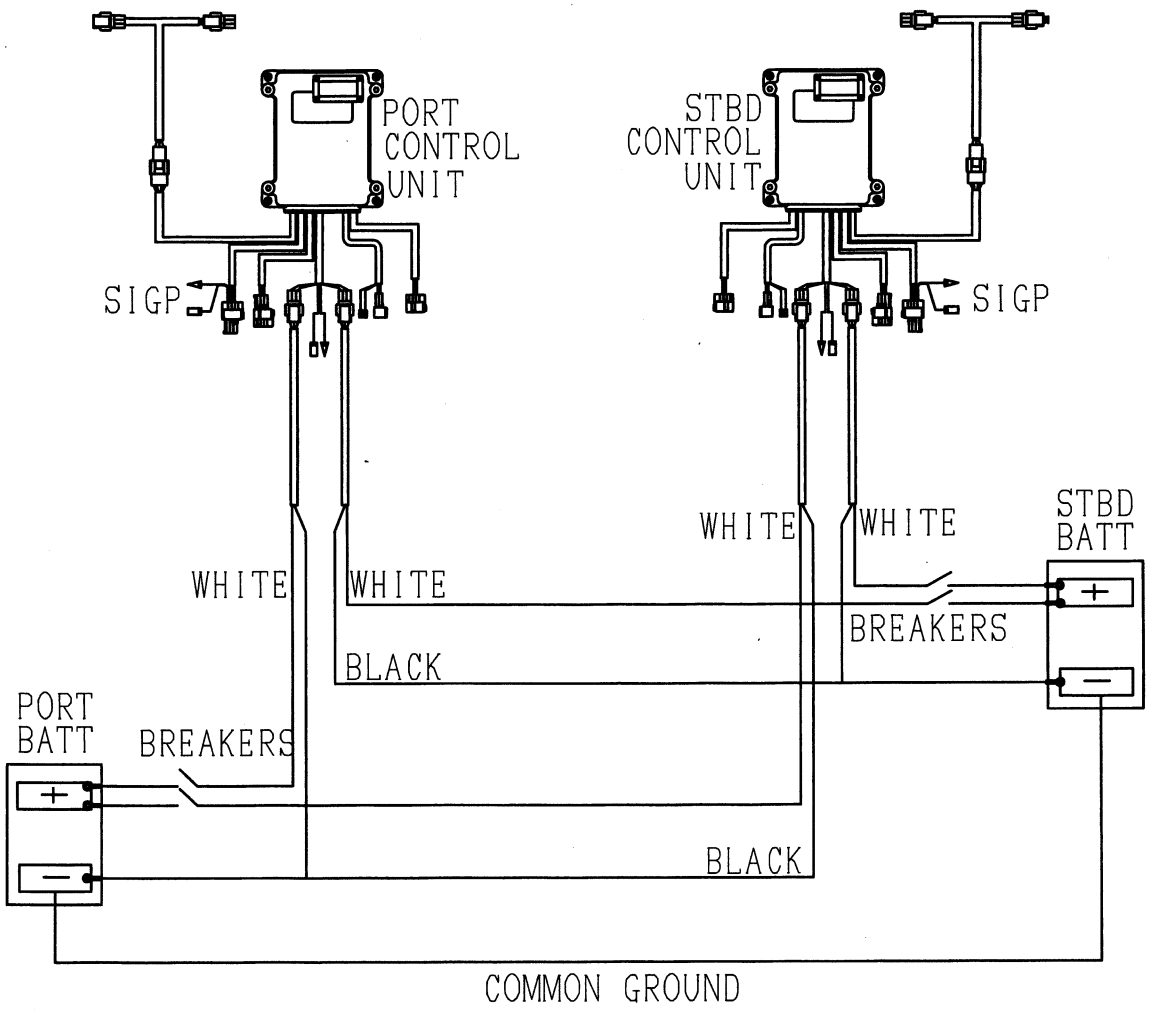

CONNECTING SYNCHRONIZATION

Instructions: (in order for the control unit to read engine synch signal properly)

1. Connect the brown wire to the engine rpm (or tachometer) signal in a case of a magnetic pick-up type circuit (typically diesel engine).
2. Connect the yellow wire to the engine rpm (or tachometer) signal in a case of an ignition coil or alternator type circuit (typically gasoline engine).
3. Refer to 'Adjusting Control Unit' for synch mode setting.

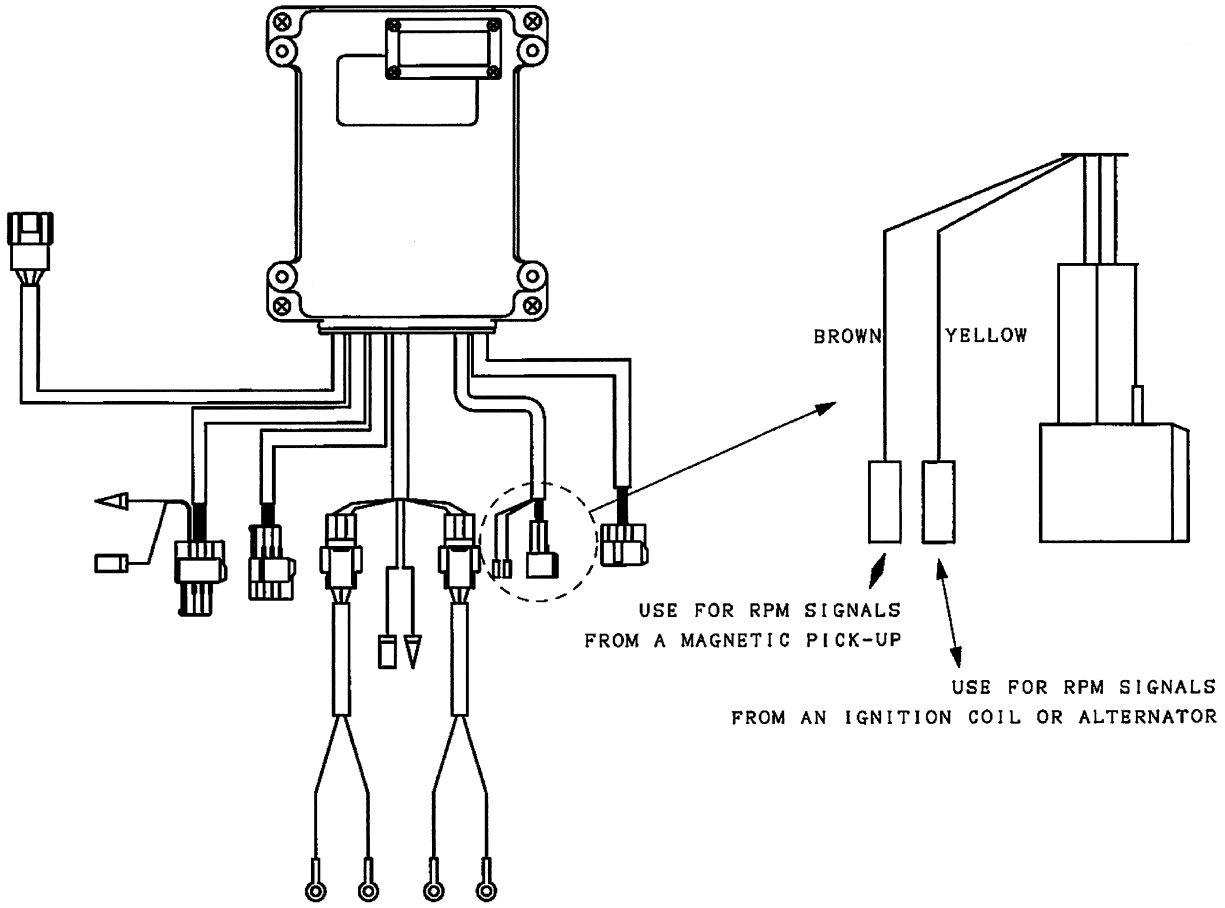

Note: No damage will occur if the case of a wrong connection, synchronization will simply be ineffective.

CONNECTING DIM HARNESS (OPTION)

Instructions:

1. Connect the Dim Harness red line to the (+) wire of navigation light.
2. Connect the Dim Harness black line to the (−) wire of navigation light.

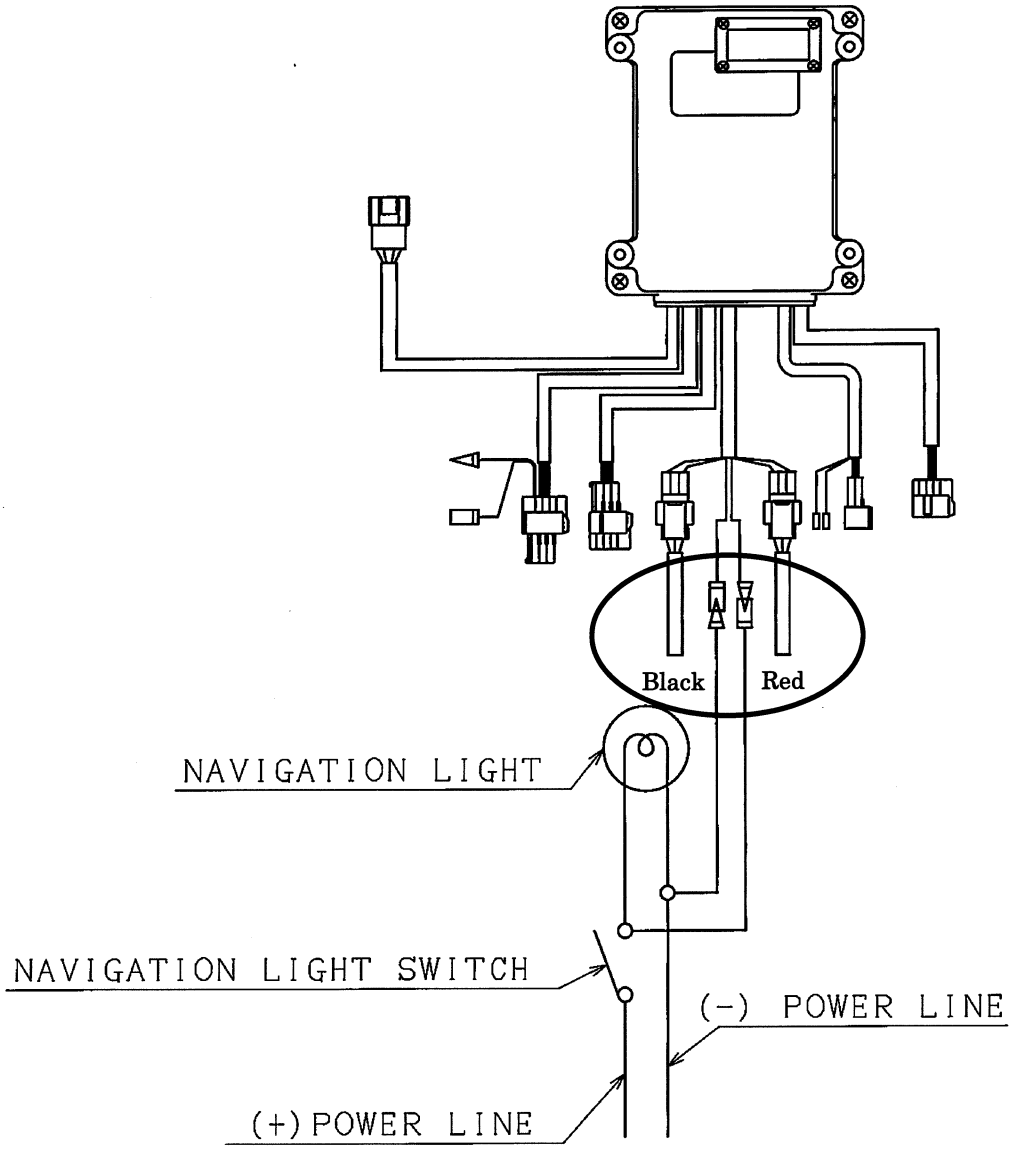

Note: Once dim harness is connected, brightness of the control head LED's illumination will be reduced whenever navigation light is ON.

CONNECTING BUZZER (OPTION)

⚠ CAUTION
Be sure to select the correct buzzer (12V or 24V) for your power source (battery). Refer to Components List for details.

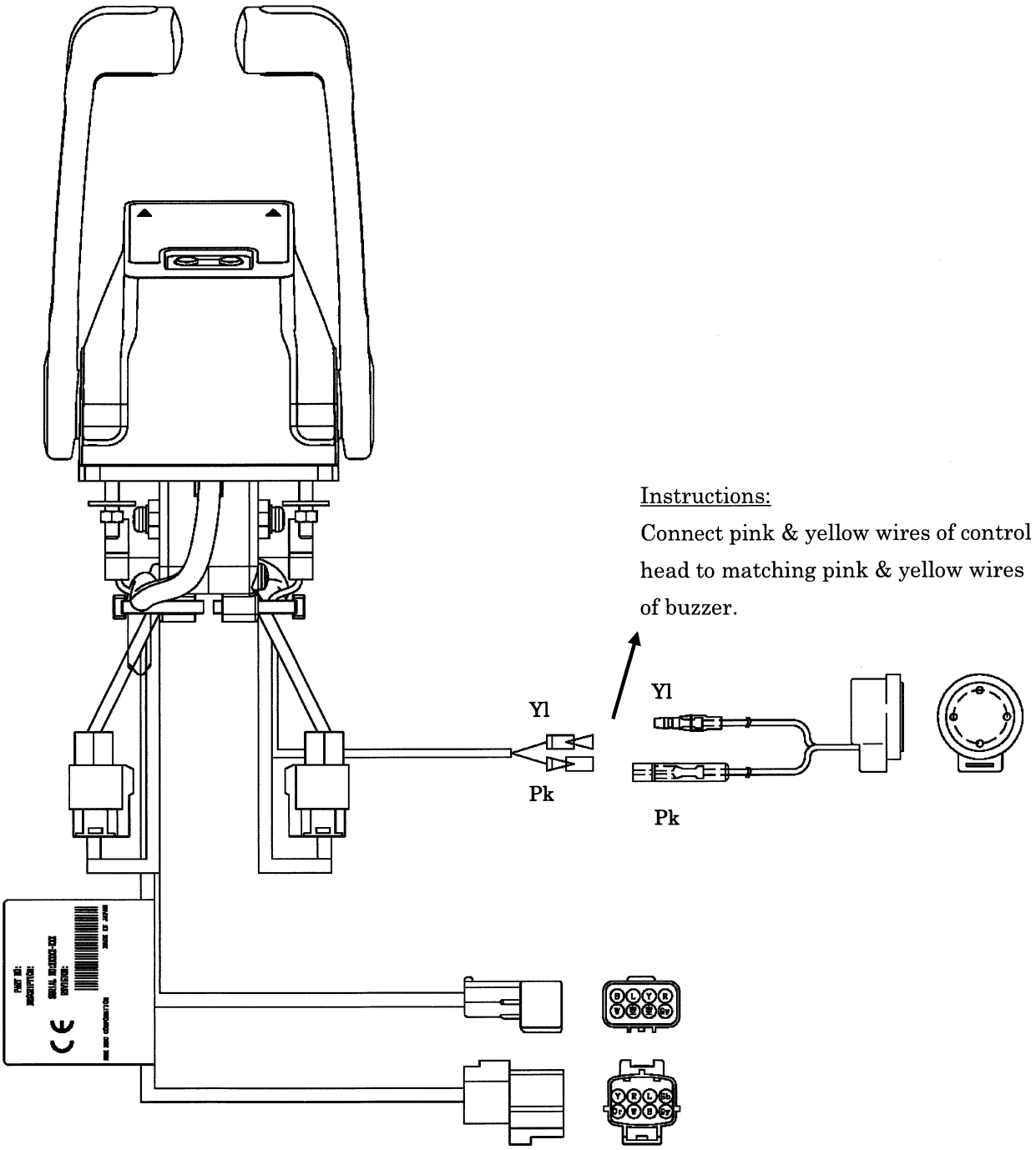

CONNECTING IDLE SWITCH (OPTION)

Instructions: For each control head / idle switch pair, connect the 8 pin harness of the control head to the idle switch directly or via a switch extension harness if other optional switches are also part of the main system.

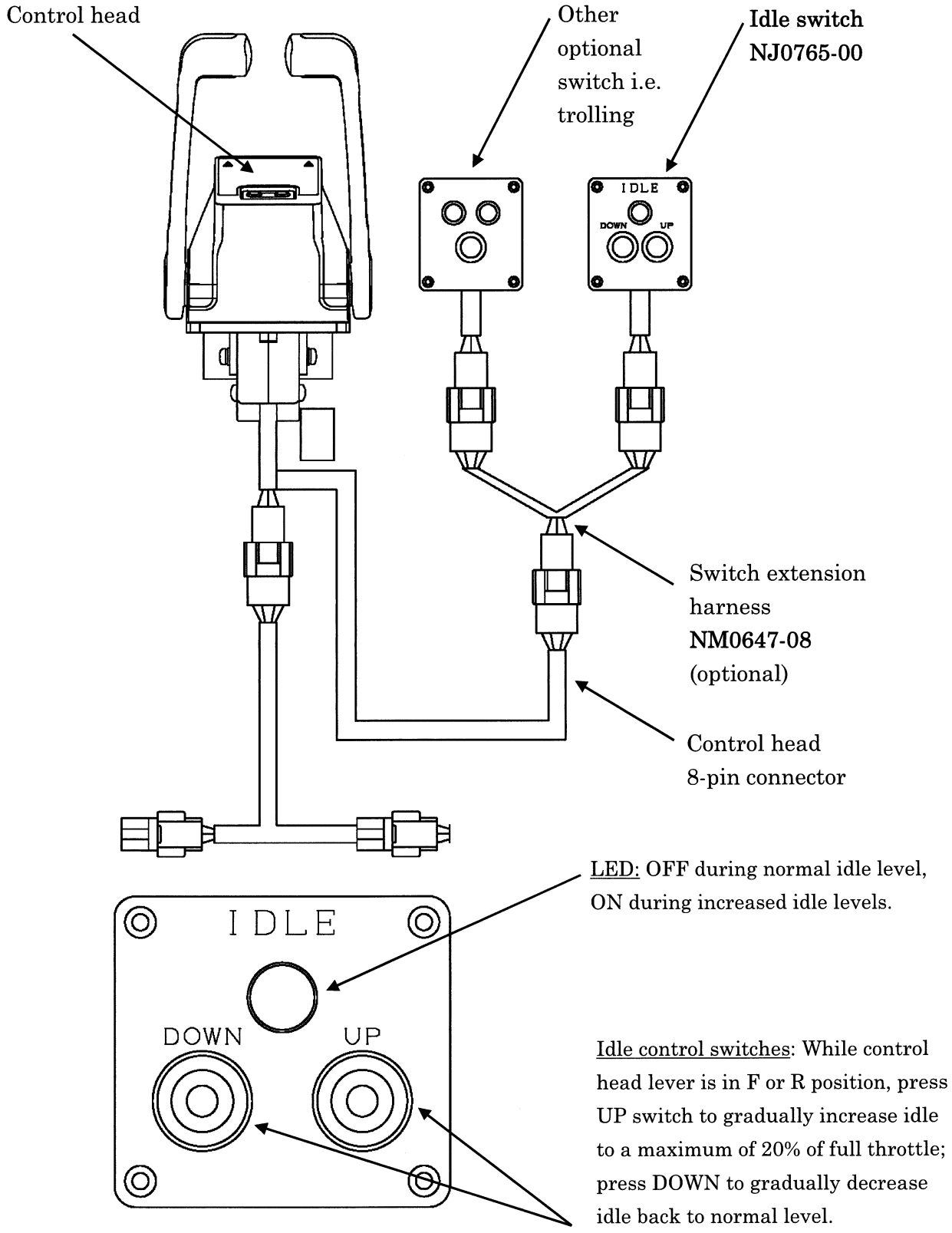

CONNECTING TRIPLE SWITCH (OPTION)

Instructions: For each control head / triple switch pair, connect the 8 pin harness of the control head to the triple switch directly or via a switch extension harness if other optional switches are also part of the main system.

Control head

Triple switch
NJ0767-00

Optional
idle switch

Switch extension
harness
NM0647-08
(optional)

Control head
8-pin connector

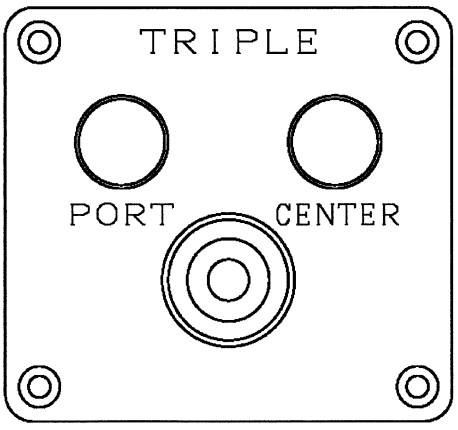

SWITCH STATUS	PORT LED	CENTER LED	PORT LEVER CONTROL
POWER ON	ON	ON	port & center
PUSH 1	ON	OFF	Port side
PUSH 2	OFF	ON	Center
PUSH 3	ON	ON	port & center

CONNECTING QUAD SWITCH (OPTION)

Instructions: For each control head / quad switch pair, connect the 8 pin harness of the control head to the quad switch directly or via a switch extension harness if other optional switches are also part of the main system.

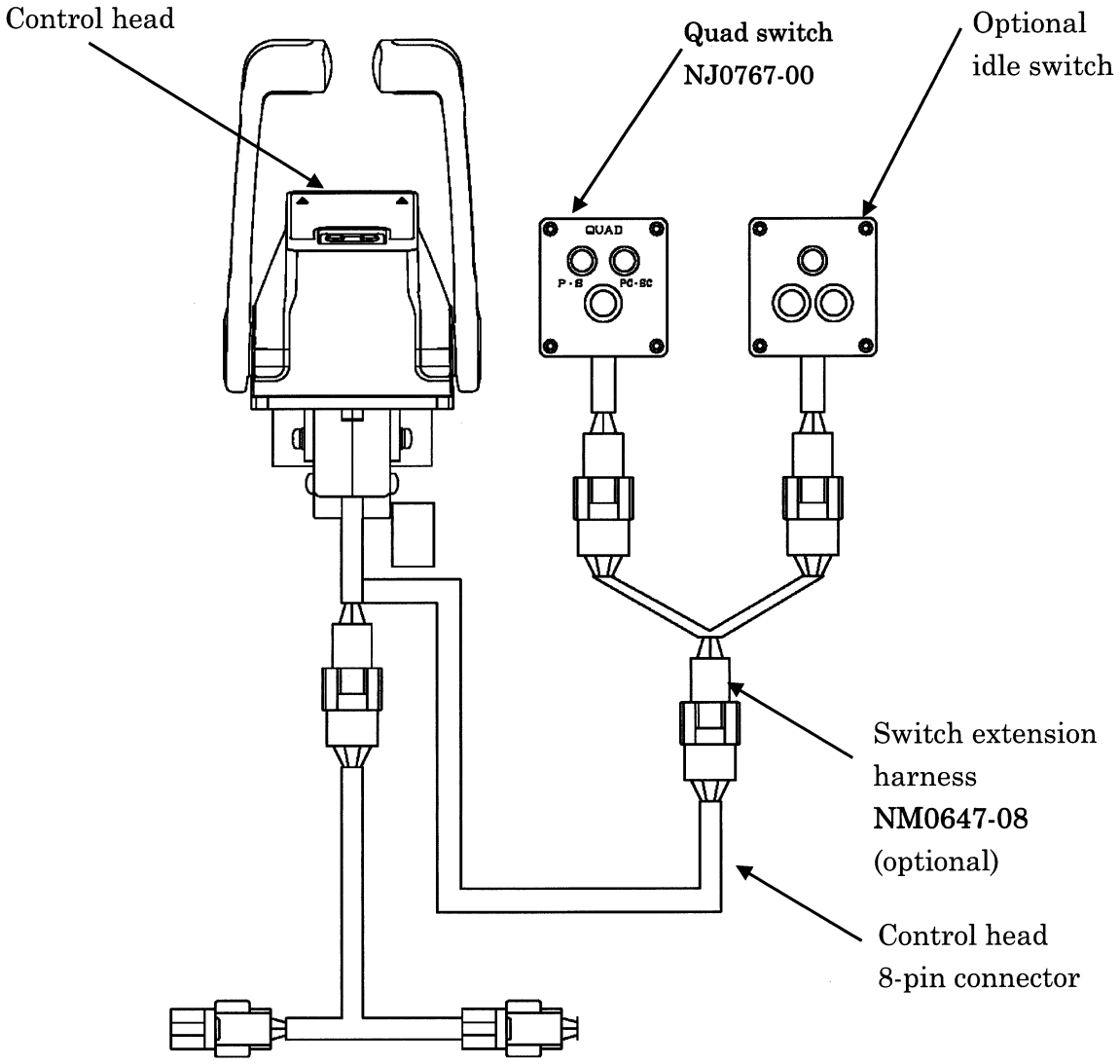

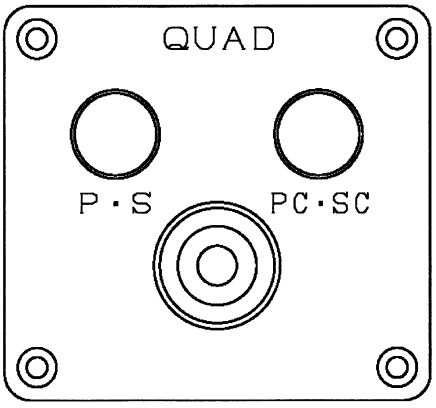

SWITCH STATUS	P·S LED	PC·SC LED	LEVERS CONTROL
POWER ON	ON	ON	all 4 outputs
PUSH 1	ON	OFF	outside outputs
PUSH 2	OFF	ON	inside outputs
PUSH 3	ON	ON	all 4 outputs

Note: Output = control unit electronic signal output

ADJUSTING THE CONTROL UNIT

⚠ CAUTION

Once control unit adjustment is completed, re-install the cover for proper seal, torque to 1.0 ~1.7 N・m (0.7 ~1.2 lbf・ft).

Instructions: To adjust system settings compatibility with engine and gear, turn power OFF and remove the control unit small cover (4 screws) and modify the DIP switch configurations, based on the tables below.

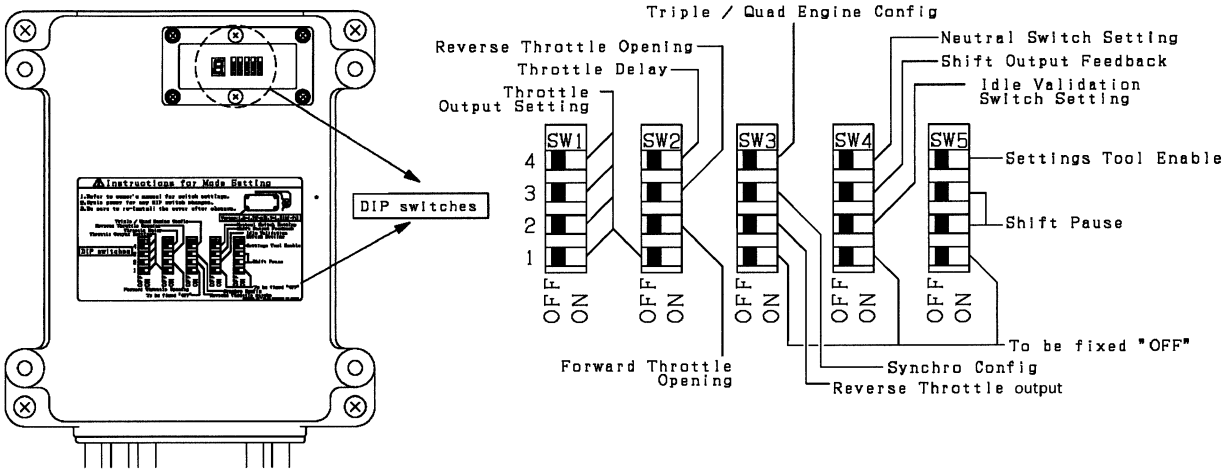

Settings Tool Enable (intended for multi-vessel data management via PC connection)

Select the following DIP switch configurations for the desired settings tool software setting.

SW 5-4	FUNCTION
OFF	Settings tool & system log access inactivated
ON	Settings tool & system log access activated.

*Before shipment, all switches are set to OFF (settings tool inactive)

Note: This DIP switch is intended to activate a software-controlled version of the settings configuration. It is intended for multi-vessel data management (boat builders, distributors, etc.) and requires a PC connection via a custom cable. Leave switch OFF to proceed with system settings via DIP switches.

Throttle Output Setup.

Select the following DIP switch settings for throttle harness type (1, 2, 3 or 4) according to engine type. For throttle harness selection details, refer to 'Outputs' on page 2 & 'Connecting to Engine' on page 19 of this manual. If necessary, contact engine maker for engine input signal requirements to determine the optimal DIP switch settings. Before setting dip switches, make sure power is OFF.

Table 1: Current Output Typical Settings

Engine	SW 1-1	SW 1-2	SW 1-3	SW 1-4	SW 2-1	Idle Output	Forward Full Throttle Output
MTU(except 183,396) MAN, Volvo	OFF	OFF	OFF	OFF	OFF	4.0mA	20.0mA
Other available Adjustments Example: Cummins KTA, Centry 8	ON	OFF	OFF	OFF	OFF	4.0mA	20.5mA
	OFF	ON	OFF	OFF	OFF	4.0mA	21.0mA
	ON	ON	OFF	OFF	OFF	4.0mA	19.5mA
	OFF	OFF	ON	OFF	OFF	4.0mA	19.0mA
	ON	OFF	ON	OFF	OFF	4.5mA	20.0mA
	OFF	ON	ON	OFF	OFF	4.5mA	20.5mA
	OFF	OFF	OFF	ON	OFF	4.5mA	21.0mA
	ON	OFF	OFF	ON	OFF	4.5mA	19.5mA
	OFF	ON	OFF	ON	OFF	4.5mA	19.0mA
	ON	ON	OFF	ON	OFF	5.0mA	20.0mA
	OFF	OFF	ON	ON	OFF	5.0mA	20.5mA
	ON	OFF	ON	ON	OFF	5.0mA	21.0mA
	OFF	ON	ON	ON	OFF	5.0mA	19.5mA
	OFF	OFF	OFF	OFF	ON	5.0mA	19.0mA
	ON	OFF	OFF	OFF	ON	3.5mA	20.0mA
	OFF	ON	OFF	OFF	ON	3.5mA	20.5mA
	ON	ON	OFF	OFF	ON	3.5mA	21.0mA
	OFF	OFF	ON	OFF	ON	3.5mA	19.5mA
	ON	OFF	ON	OFF	ON	3.5mA	19.0mA
	OFF	ON	ON	OFF	ON	3.0mA	20.0mA
	OFF	OFF	OFF	ON	ON	3.0mA	20.5mA
	ON	OFF	OFF	ON	ON	3.0mA	21.0mA
	OFF	ON	OFF	ON	ON	3.0mA	19.5mA
	ON	ON	OFF	ON	ON	3.0mA	19.0mA
	OFF	OFF	ON	ON	ON	4.0mA	20.0mA
	ON	OFF	ON	ON	ON	4.0mA	20.0mA
	OFF	ON	ON	ON	ON	4.0mA	20.0mA

※Before shipment, the switches are set to OFF(4.0mA to 20.0mA output).

Table 2: Voltage Output Typical Settings

Engine	SW 1-1	SW 1-2	SW 1-3	SW 1-4	SW 2-1	Idle Output	Forward Full Throttle Output
Detroit Diesel John Deere Steyr (single input)	OFF	OFF	OFF	OFF	OFF	0.50V	4.50V
Cummins Quantum Centry 1 or 8	OFF	OFF	OFF	ON	ON	0.65V	4.35V
				OFF	ON	0.50V	4.35V
				ON	OFF	0.65V	4.50V
Volkswagen, Iveco FPT	OFF	ON	OFF	OFF	OFF	0.20V	4.53V
				OFF	ON	0.20V	4.35V
				ON	OFF	0.40V	4.53V
				ON	ON	0.40V	4.35V
Scania, including DI13 equipped with coordinator interface	ON	ON	OFF	OFF	OFF	0.40V	3.00V
				OFF	ON	0.40V	2.90V
				ON	OFF	0.50V	3.00V
				ON	ON	0.50V	2.90V
Other available adjustments	ON	OFF	OFF	OFF	OFF	0.90V	4.50V
				OFF	ON	0.90V	4.35V
				ON	OFF	1.05V	4.50V
				ON	ON	1.05V	4.35V
	OFF	OFF	ON	OFF	OFF	0.90V to 1.20V	4.00V
				OFF	ON	0.90V to 1.20V	3.88V
				ON	OFF	1.02V to 1.32V	4.00V
				ON	ON	1.02V to 1.32V	3.88V
	ON	OFF	ON	OFF	OFF	0.30V	4.50V
				OFF	ON	0.30V	3.90V
				ON	OFF	0.75V	4.50V
				ON	ON	0.75V	3.90V
	OFF	ON	ON	OFF	OFF	0.60V	4.10V
				OFF	ON	0.80V	4.20V
				ON	OFF	0.60V	4.40V
				ON	ON	0.80V	4.40V

※Before shipment, the switches are set to OFF(Idle 0.50V, Forward full throttle: 4.50V)

Table 3: PWM Output Typical Settings

Engine	SW 1-1	SW 1-2	SW 1-3	SW 1-4	SW 2-1	Idle Output (duty cycle)	Forward Full Throttle Output (duty cycle)
Caterpillar	NO EFFECT			OFF	OFF	8%	92%
Other available adjustments				OFF	ON	8%	94%
				ON	OFF	6%	92%
				ON	ON	6%	94%

※Before shipment, the switches are set to OFF (Engine Type: Caterpillar 8% - 92%).

Table 4: CAN Output Settings

Engine	SW 1-1	SW 1-2	SW 1-3	SW 1-4	SW 2-1	SAE J1939 protocol
Nanni Diesel	NO EFFECT					For other engines, contact dealer for details

※Before shipment, the switches are set to OFF.

Forward Throttle Opening

Select the following DIP switch configurations for the desired forward throttle opening curve. This function facilitates fine throttle adjustment over the idle to low RPM range and decreases the shock effect if the hand lever is operated suddenly.

SW2-2	FUNCTION
OFF	Forward throttle opening 1
ON	Forward throttle opening 2

※Before shipment, the switch is set to OFF(Opening 1).

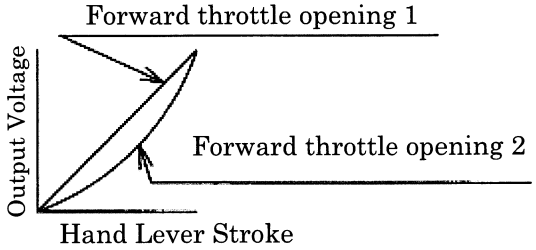

Reverse Throttle Opening.

Select the following DIP switch configurations for the desired reverse throttle opening curve.

SW2-3	FUNCTION
OFF	Reverse throttle opening 1
ON	Reverse throttle opening 2

※Before shipment, the switch is set to OFF(Opening 1).

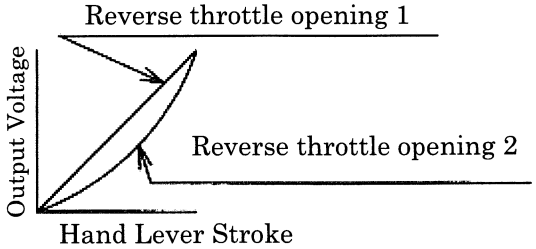

Throttle Delay

Select the following DIP switch configurations for the desired throttle delay setting. This function delays the shock effect if the hand lever is operated suddenly from neutral to throttle. Delay time: 1 sec.

SW2-4	FUNCTION
OFF	No throttle delay
ON	Throttle delay

※Before shipment, the switch is set to OFF(no throttle delay).

Reverse Throttle Output

Select the following DIP switch configuration for the desired throttle output in full reverse

SW3-2	FUNCTION
OFF	100% of the forward full open
ON	60% of the forward full open

※Before shipment, the switch is set to OFF(100% of the full forward throttle stroke).

Synchronization Configuration

Select the following DIP switch configurations for the desired synchronization setting.

SW 3-3	FUNCTION
OFF	Single lever controls both outputs during synchronization.
ON	Dual lever control

*Before shipment, all switches are set to OFF (single lever).

Notes:

1. Be sure to set the DIP switches of all control units with the same settings for proper synchronization function.
2. Refer to previous sections in this manual for synch function connection & operation instructions.

Triple & Quad Engine Configuration (not active for single or dual engine configuration)

Select the following DIP switch configurations for the desired triple & quad engine settings.

SW 3-4	FUNCTION
OFF	When outer control unit shift outputs do not match (i.e. PORT Forward, STBD Reverse) then inside control unit output(s) default to Neutral. When outer control unit outputs match, inside control unit outputs(s) also match.
ON	Triple: Center engine control unit output matches PORT side control head lever. Quad: Inner control unit outputs match adjacent control unit levers.

*Before shipment, all switches are set to OFF (Center engine neutral default).

IVS: Idle Validation Switch

Select the following DIP switch configurations for the desired IVS settings. For further detail refer to 'Lever & Stroke Outputs' on page 14

SW4-2	FUNCTION
OFF	Effective
ON	Ineffective

※Before shipment, the switch is set to OFF(Effective).

Shift Output Feedback

Select the following DIP switch configurations for the desired Output Feedback settings. Effective means that control head LED's will represent control unit output rather than control head lever position.

SW4-3	FUNCTION
OFF	Ineffective
ON	Effective

※Before shipment, the switch is set to OFF (Ineffective).

Neutral Switch

Select the following DIP switch configurations for the desired marine gearbox neutral switch settings.

SW4-4	FUNCTION
OFF	Ineffective
ON	Effective

※Before shipment, the switch is set to OFF (Ineffective).

Shift Pause

Select the following DIP switch configurations for the desired shift pause setting. This function delays the shock effect if the hand lever is operated suddenly from throttle to neutral.

SW5-2	SW5-3	FUNCTION
OFF	OFF	No shift pause
ON	OFF	2 seconds
OFF	ON	4 seconds
ON	ON	6 seconds

※Before shipment, both the switches are set to OFF(no shift pause).

OPERATION CHECK

Carry out operation check as follows when the installation work is completed.

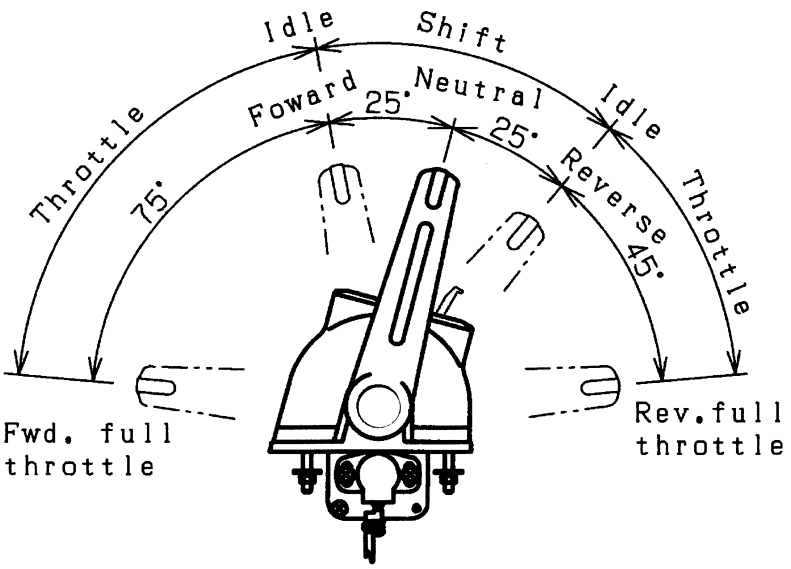

Shift and throttle operation check

Step	Hand lever operation	Description (engine side)
1	Neutral → Forward	Gear shifted from neutral to forward
2	Forward → Forward full open	Throttle shifted from fully closed to fully open
3	Forward full open → Neutral	Throttle shifted from fully open to fully closed Gear shifted from forward to neutral
4	Neutral → Reverse	Gear shifted from neutral to reverse
5	Reverse → Reverse full open	Throttle shifted from fully closed to fully open
6	Reverse full open → Neutral	Throttle shifted from fully open to fully closed Gear shifted from reverse to neutral

Note: If the correct operation cannot be made, change the operation mode. (See "Adjusting the Control Unit"). If the forward/neutral/reverse LED's flash, refer to "Alarm Codes".

Confirmation of SIGP function

Step	Description	OK	Countermeasure if not OK
1	Set hand lever to NEUTRAL and start the engine	Engine starts	Shorten SIGP wiring connection (see 'Connecting SIGP')
2	Set hand lever to FORWARD and start the engine	Engine does not start	Connect SIGP as per instructions (see 'Connecting SIGP')

ALARM CODES

In case of a system operation fault, the failure code is indicated via the forward/neutral/reverse LED's flashing frequency an optional buzzer.

Flashing frequency	Possible Cause	Check / Countermeasure	Reference
1 * Shift Signal	(1) Shift harness disconnected or damaged	(1) Reconnect or replace the shift harness	Pages 4, 6, 8, 10, 19
2 * * Control Head Signal, Bus Harness	(1) Control head 6-pole harness loop not properly. (2) A. Control head 6-pole harness loop : 1 output line damaged → system still operates. (3) B. Control head 6-pole harness loop : 2 output lines damaged → system no longer operates.	(1)Reconnect 6-pole harness loop(s). (2) A. Consult dealer for replacement item at earliest convenience. (3) B. Consult dealer for replacement item immediately.	page 13 page 13 page 13
3 * * * Power	(1) One of duplex power lines is disconnected. (2) Either circuit breaker is OFF. (3) Power supply harness damaged. (4) Battery voltage is outside the operating voltage range. (5) Power activation timing offset.	(1) Connect both lines. (2) Turn ON both circuit breakers. (3) Replace the power supply harness (4) Use the battery within the operating voltage range. (5) Connect power harnesses as per instructions or activate power for PORT & STBD simultaneously.	page 21 page 21 page 21 page 2 page 21
4 * * * * Control Head	(1) Control head select switch pressed-in or shorted. (2) Control head sync switch pressed-in or shorted.	Reset/unlock the switch or consult dealer for replacement item.	Page 13

ALARM CODES (continued)

Flashing frequency	Possible Cause	Check / Countermeasure	Reference
7 * * * * * * * Option Switch Harness	Option switch pressed-in or shorted. I.e. Idle control switch, Triple switch or Quad switch.	Reset/unlock the switch or consult dealer for replacement item.	Page 13, 25-27
8 * * * * * * * * Bus	(1)Bus harness damaged (2)Any T-harness disconnected or damaged: control head or control unit. (3)Any T-harness connecting harness damaged: control head 8-pole / 6-pin harness or control unit CAN harness, (4)Optional settings tool setup completed (5) Power activation timing offset.	(1) Replace bus harness (2)Reconnect or replace T-harness. (3)Consult dealer for replacement item. (4)Cycle power as per settings tool instructions (5) Connect power harnesses as per instructions or activate power for PORT & STBD simultaneously.	Page 18 Pages 4-11, 18 Pages 4-11, 18 Settings tool manual Page 21

TROUBLESHOOTING

Consult this table if problems occur without an associated flashing LED alarm code.

Symptom	Possible Cause	Check / Countermeasure	Reference
No operation even though power source is ON.	(1) Power harness is not connected correctly. (2) Circuit breaker OFF	(1) Connect the Power harness correctly. (2) Turn circuit breaker ON.	Page 21 Page 21
No control head LED's ON.	(1) Hand lever is not in neutral during initial operation. (2) R/C-1 of the control unit is not connected to control head. (3) Damaged LED circuit (4) Damaged CANbus harness or T-harness	(1) Set the hand lever to NEUTRAL with power ON. (2) Connect the control head to R/C-1. (3) Consult dealer for control head replacement. (4) Replace the T-harness or CANbus harness.	Page 14 Page 18 Pages 13, 16
F, N, R LED light ON but shift clutch does not engage.	(1) Shift harness is disconnected or damaged. (2) Control unit circuit damaged.	(1) Reconnect or replace the shift harness. (2) Consult your dealer for control unit replacement.	Page 19
F, N, R LED ON but engine speed does not respond to KE system.	(1) Throttle harness is disconnected or damaged. (2) Throttle output setting is incorrect. (3) Incorrect harness. (4) Control unit circuit damaged.	(1) Reconnect or replace the throttle harness. (2) Adjust dip switch settings. (3) Select appropriate harness. (4) Consult your dealer for control unit replacement.	Page 19 Pages 28-31 Pages 2&19
Engine does not start.	(1) Low battery voltage. (2) SIGP harness too long.	(1) Charge the battery. (2) Shorten SIGP harness.	Page 20
Neutral throttle operation not possible.	(1) Neutral throttle operation is not set correctly. (2) Defective SELECT switch	(1) Carry out setting correctly. (2) Consult your dealer for control head replacement.	Page 15
Synchronization operation not functional.	(1)Input signal incorrect. (2)Levers more than 10°apart in dual lever mode	(1)Verify synchronization circuit signal type & connection. (2)Adjust levers to be within 10°	Page 22 Page 15

MAINTENANCE AND SERVICE

KE-5+ control system components contain moving parts and precision sensors. In order to ensure continued safe and reliable system operation in a marine environment, please refer to the following general guidelines on maintenance and service.

Control Head

1. Component replacement is recommended after 100 000 operation cycles or after 5 years of extended use in marine environment.

Control Unit & Harnesses

1. Check all harnesses for wiring damage periodically.
2. Check all connectors for proper seating periodically.
3. Component replacement is recommended after 7 years of extended use in marine environment.

Note: In the case of KE control system transfer of ownership, please make sure to include maintenance and service information

CONTROL HEAD TEMPLATE

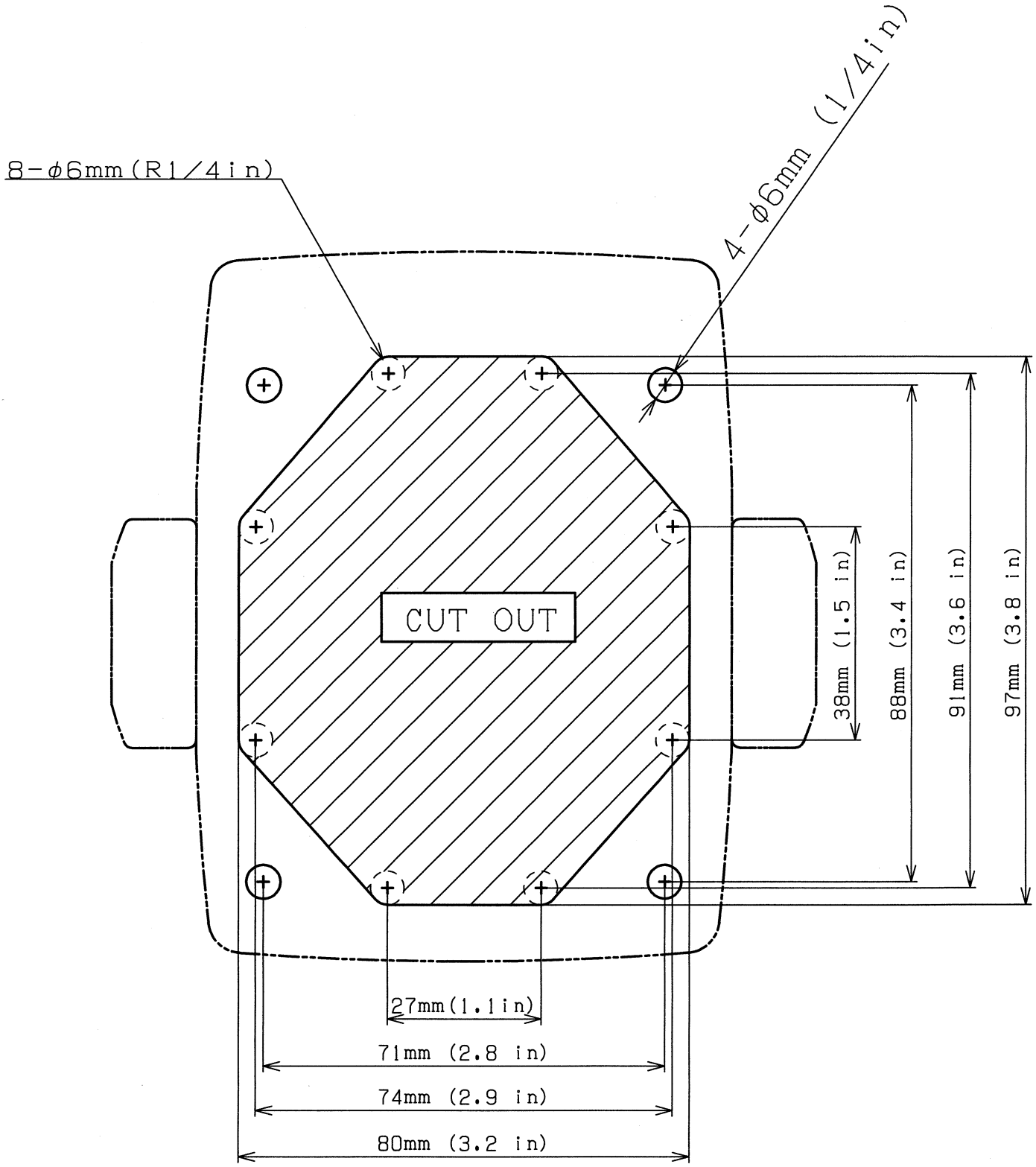

CONTROL UNIT TEMPLATE

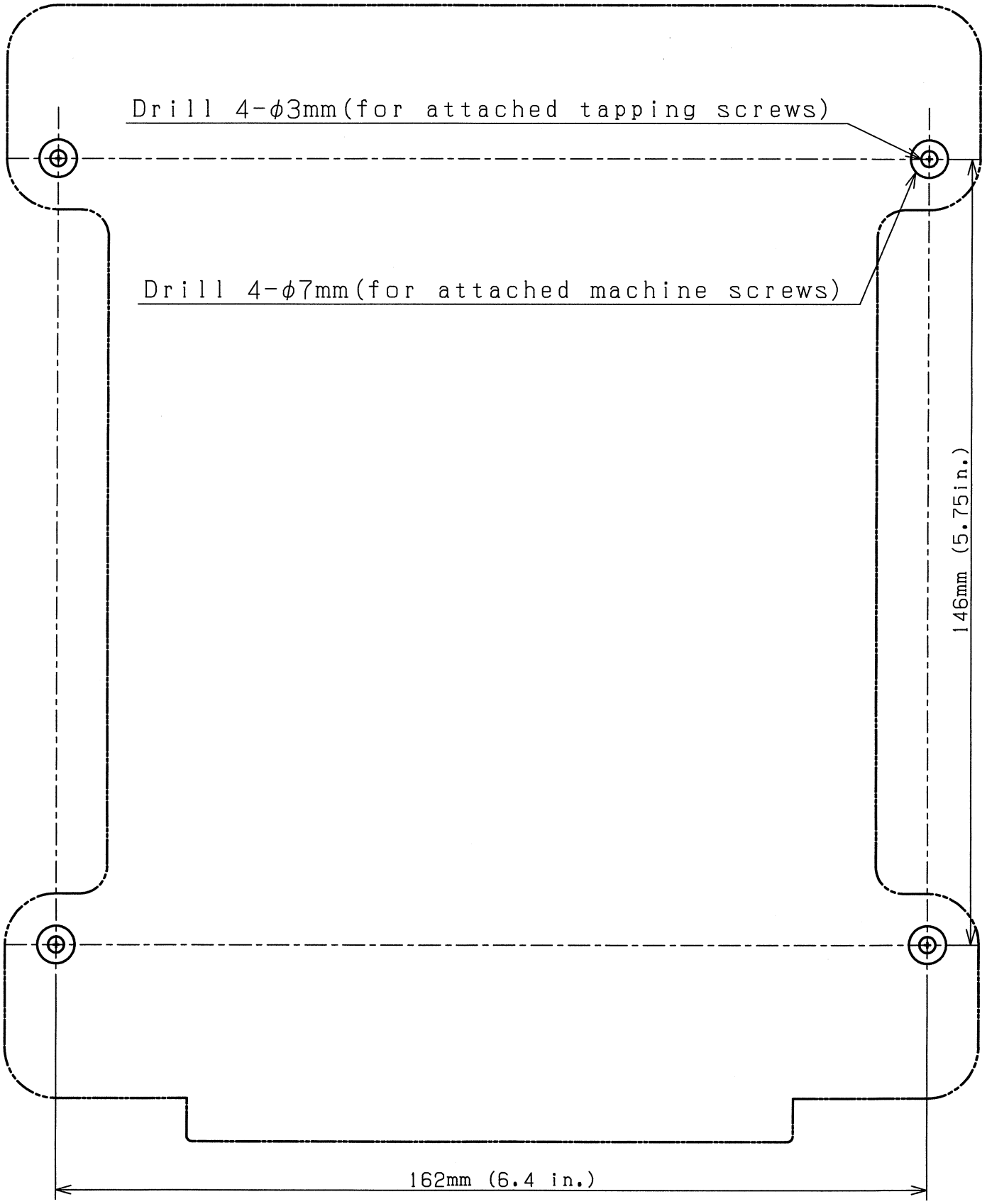

IDLE / TRIPLE / QUAD / SWITCH TEMPLATE

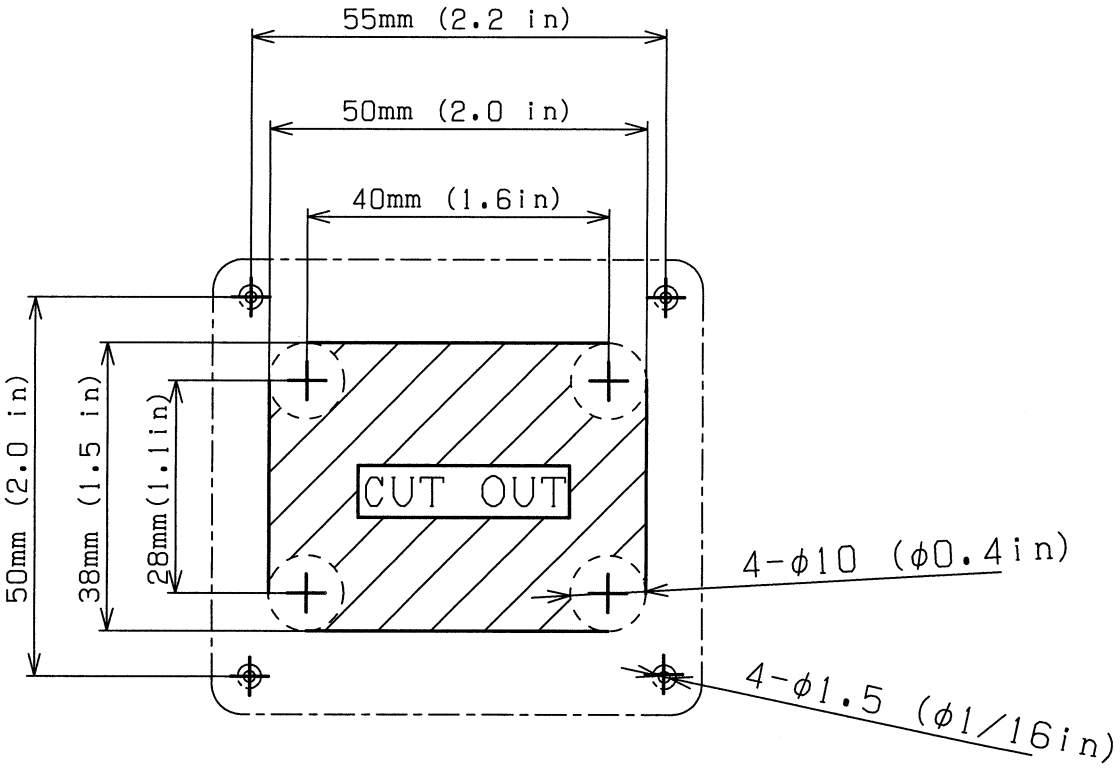

NHK MEC Corporation

3-21-10, SHIN-YOKOHAMA, KOHOKU-KU, YOKOHAMA,
222-0033, JAPAN
PHONE: +81(45)475-8902 FAX: +81(45)475-8907

M000205 5B 14.10 PRINTED IN JAPAN